Wastewater Facility Plan

City of Custer, SD

February 2020

DGR ENGINEERING

KLJ

WASTEWATER FACILITY PLAN
FOR
CUSTER, SOUTH DAKOTA

DGR Project No. 669021

I hereby certify that this plan, specification or report was prepared by me or under my direct supervision and that I am a duly Registered Professional Engineer under the laws of the State of South Dakota.

REGISTERED PROFESSIONAL ENGINEER
REG NO.
12916
SAMUEL A.
JOHNSON
SOUTH DAKOTA
2/04/2020

By:_____

Sam Johnson, P.E.
Registration No. 12916

DGR Engineering

2909 East 57th Street, Suite 101
Sioux Falls, SD 57108
(605) 339-4157

REGISTERED PROFESSIONAL ENGINEER
REG. NO.
11640
DANA R.
FOREMAN
02/04/2020
SOUTH DAKOTA

By:_____

Dana Foreman, P.E.
Registration No. 11640

KLJ

330 Knollwood Drive
Rapid City, SD 57701-6611
(605) 721-5553

Table of Contents

INTRODUCTION **1**
BACKGROUND INFORMATION 1
SCOPE OF REPORT 1
COMMUNITY INFORMATION **3**
LOCATION 3
POPULATION STATISTICS 3
TOPOGRAPHY/CLIMATE 4
EXISTING WASTEWATER SYSTEM **5**
COLLECTION SYSTEM 5
EXISTING WASTEWATER FLOWS 5
INFILTRATION AND INFLOW (I/I) 6
WASTEWATER TREATMENT 8
Compliance Inspection 8
Existing Discharge Force Main Condition and Cost 9
Existing Plant Condition 11
Hydraulic Loading 11
Organic Loading 12
WASTEWATER EFFLUENT LIMITATIONS 13
FUTURE WASTEWATER CONDITIONS 14
DEVELOPMENT OF WASTEWATER ALTERNATIVES **17**
DEVELOPMENT OF ALTERNATIVES 17
PRESENT WORTH ANALYSIS 17
WASTEWATER COLLECTION 17
Collection System Alternative #1 – No Action 17
Collection System Alternative #2 – Continue to Repair System 17
DISCHARGE LOCATION 18
Discharge Location Alternative #1 – Utilize Existing Discharge Location-Flynn Creek 18
Discharge Location Alternative #2 – New Discharge Location – Beaver Creek Airport 18
Discharge Location Alternative #3 – New Discharge Location – Beaver Creek Sidney Park 18
Discharge Location Alternative #4 – New Discharge Location-French Creek 18

WASTEWATER TREATMENT 18
Wastewater Treatment Alternative A – No Action 20
Wastewater Treatment Alternative B – Existing Plant Improvements 20
Wastewater Treatment Alternative C – Submerged Attached Growth Reactor 20
Wastewater Treatment Alternative D – Aerated LemTec Polishing Reactor 21
Wastewater Treatment Alternative E– Xylem Sanitaire Flow Through Sequencing Batch Reactor 22
Wastewater Treatment Alternative F – Veolia Moving Bed Biofilm Reactor 23
EVALUATION OF WASTEWATER ALTERNATIVES 24
WASTEWATER COLLECTION ALTERNATIVE EVALUATION 24
Wastewater Treatment Alternative #1 – No Action 254
Wastewater Treatment Alternative #2 – Continue to Repair System 264
DISCHARGE LOCATION ALTERNATIVE EVALUATION 24
Discharge Location Alternative #1 – Utilize Existing Discharge Location-Flynn Creek 24
Discharge Location Alternative #2 – New Discharge Location – Beaver Creek Airport 24
Discharge Location Alternative #3 – New Discharge Location – Beaver Creek Sidney Park 25
Discharge Location Alternative #4 – New Discharge Location-French Creek 25
WASTEWATER TREATMENT ALTERNATIVE EVALUATION 25
Wastewater Treatment Alternative A – No Action 25
Wastewater Treatment Alternative B – Existing Plant Improvements 26
Wastewater Treatment Alternative C – Submerged Attached Growth Reactor 26
Wastewater Treatment Alternative D – Aerated LemTec Polishing Reactor 30
Wastewater Treatment Alternative E – Sequencing Batch Reactor 30
Wastewater Treatment Alternative F – Moving Bed BioReactor 33
Opinion of Probable Project Costs 35
EVALUATION OF OPERATION COSTS 36
EVALUATION OF MONETARY COSTS 38
RECOMMENDED ALTERNATIVES 39
Total Project Cost Summary 39
SHORT LIVED ASSET REPLACEMENT 40

CAPITAL FINANCING PLAN 41
ENVIRONMENTAL EVALUATION 42
Historical and Archaeological Sites 42
Floodplains and Wetlands 42
Agricultural Lands 42
Wild and Scenic Rivers 42
Fish and Wildlife Protection 43
Water Quality and Quantity 43
Miscellaneous Issues 43
VIEWS OF THE PUBLIC AND CONCERNED INTEREST GROUPS 43
SELECTED PLAN, DESCRIPTION AND IMPLEMENTATION ARRANGEMENT 44
JUSTIFICATION AND DESCRIPTION OF SELECTED PLAN 44
DESIGN OF SELECTED PLAN 44
OPINION OF PROBABLE COST FOR THE SELECTED PLAN 44
ENVIRONMENTAL IMPACTS OF SELECTED PLAN 44
ARRANGEMENTS FOR IMPLEMENTATION 45
Operation and Maintenance Requirements 45
LAND ACQUISITIONS 45
IMPLEMENTATION SCHEDULE 45
REFERENCES 46

LIST OF FIGURES

FIGURE 1 - POPULATION TREND 4
FIGURE 2 - DAILY INFLUENT FLOW RATES 6
FIGURE 3 - FLOWS AND PRECIPITATION CHART 7
FIGURE 4 - DISCHARGED AMMONIA CONCENTRATION 9
FIGURE 5 - AERIAL PHOTO OF FORCE MAIN BREAKS 10
FIGURE 6 - EXISTING WASTEWATER TREATMENT SYSTEM SCHEMATIC 19
FIGURE 7 - ALTERNATIVE C-SAGR SCHEMATIC 21
FIGURE 8 - ALTERNATIVE D LEMTEC SCHEMATIC 22
FIGURE 9 - ALTERNATIVE NO. E OR F-SBR OR MBBR SCHEMATIC 23

LIST OF TABLES

TABLE 1 - HYDRAULIC LOADING 11
TABLE 2 - ORGANIC LOADING 12
TABLE 3 - EXISTING EFFLUENT LIMITS 13
TABLE 4 - TOTAL ANNUAL FLOW TO GOLF COURSE 14
TABLE 5 - ANTIDEGRADATION LIMITS FOR FRENCH CREEK 14
TABLE 6 - EXISTING DESIGNATED USES LIMITS FOR FRENCH CREEK 15
TABLE 7 - FLYNN CREEK EFFLUENT LIMITS NEXT PERMIT CYCLE 16
TABLE 8 - BEAVER CREEK EFFLUENT LIMITS 16
TABLE 9 - COST ESTIMATE FOR WASTEWATER TREATMENT ALTERNATIVE B 26
TABLE 10 - COST ESTIMATE FOR WASTEWATER TREATMENT ALTERNATIVE C 28
TABLE 11 - COST ESTIMATE FOR WASTEWATER TREATMENT ALTERNATIVE E-SBR 31
TABLE 12 - COST ESTIMATE FOR WASTEWATER TREATMENT ALTERNATIVE F-MBBR 33
TABLE 13 - OPINION OF PROBABLE PROJECT COST COMPARISON 35
TABLE 14 - FLYNN CREEK DISCHARGE O&M 36
TABLE 15 - BEAVER CREEK DISCHARGE O&M 36
TABLE 16 - FRENCH CREEK DISCHARGE O&M 37
TABLE 17 - 20-YEAR COST OF OWNERSHIP COMPARISON 38
TABLE 18 - SHORT LIVED ASSETS 40
TABLE 19 - CAPITAL FINANCING PLAN 41

INTRODUCTION

BACKGROUND INFORMATION

The City of Custer is governed by an Aldermanic form of government. The City is divided into three wards, with two council persons elected from each ward. The mayor is elected by all city residents. The City Council and the mayor have the responsibility of determining City policies.

The City wants to take a comprehensive look at their existing infrastructure to accommodate the potential for continued growth and develop a plan to rehabilitate their existing infrastructure that is beyond its useful life or in need of repair.

SCOPE OF REPORT

The City of Custer has authorized DGR Engineering and KLJ to prepare this Facility Plan to identify and address the needs for improvements to the City's wastewater treatment facility. This plan will identify existing issues within the City's sewer systems and address the technical and financial feasibility of various improvements. The scope of the DGR report is as follows:

- Data Collection of existing as-builts for the WWTF, equipment operation data including pump run times, energy usage by equipment, flowrates, DMRs, sampling results, DENR inspection reports. Past system repairs and assessments. Force main data including repairs and replacements, review of any completed assessments and recommendations. City Staff knowledge and insight.
- Detailed description of each alternative. These options may include aeration ponds, polishing treatment options, conventional activated sludge, package treatment systems, etc. Each alternative above includes several treatment process variations. Several of the applicable options will be researched and evaluated, with input from the City, as to which is the best fit to meet the City's needs and desires. The selected alternative may be a hybrid of several options.
- Advantages and disadvantages associated with each alternative.
- Preliminary site layout for each alternative.
- Detailed preliminary opinion of probable cost for each alternative.
- Annual and lifetime operations and maintenance costs for each alternative.

- Recommendation of alternative.

COMMUNITY INFORMATION

LOCATION

The City of Custer is located in north central Custer County, South Dakota, at the intersection of US Highway 16 and US Highway 385. Custer County is located in southwest South Dakota.

POPULATION STATISTICS

The 2010 census data indicated a population of 2,076 for Custer. The median age of Custer residents is 47.5 years. The most recent census data indicated the City's median household income is $35,290 which is $9,753 below the South Dakota median household income of $45,043.

The population in Custer, SD experienced an annual growth of approximately 1.11 percent per year between 2000 (1,860 people) and 2010 (2,067 people) censuses. The annual growth rate was determined by calculating the straight-line growth between 2010 census population and the 2000 census populations [(2,067-1,860)/1,860=11.1%]. The straight-line growth over the 10-year period was calculated to be 1.11%. Assuming the growth rate continues, Custer will have a population of 2,680 by 2040. The future population was estimated utilizing the annual growth rate over the time period, of 20 years (projected population design period as defined in Section I.C.2 of the Recommended Design Criteria Manual for Wastewater Collection and Treatment Facilities by SD DENR) and the straight-line growth rate method.

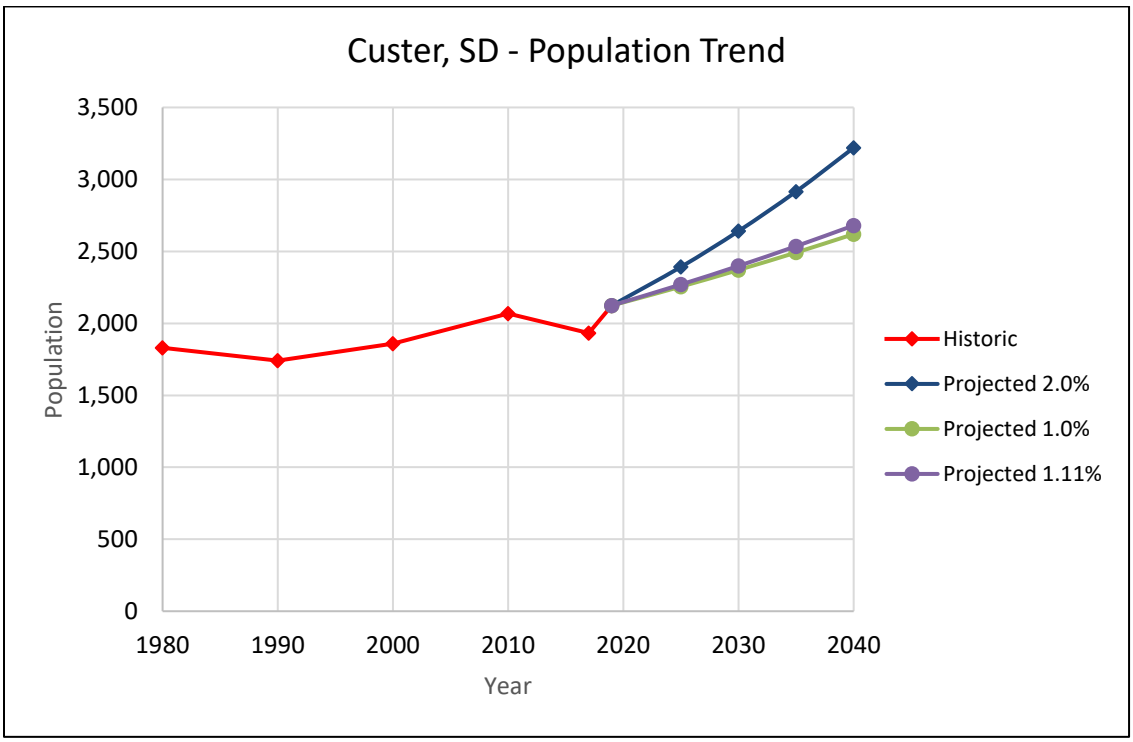

Figure 1 - Population Trend

TOPOGRAPHY/CLIMATE

The City of Custer lies within the southern Black Hills. The Black Hills are an extension of the Rocky Mountains that occupy the south half of South Dakota's western border. The mountains, which tower about 4,000 ft over the neighboring plains, include Harney Peak (7,242 ft), the highest point in the state and the highest point in the United States east of the Rocky Mountains.

Custer has a moderate climate, which makes it a pleasant area to live. The average precipitation amounts in January are 0.20" while in June it is 1.15". Average temperatures in Custer are 24.9 degrees Fahrenheit in January and 73.4 degrees Fahrenheit in July.

EXISTING WASTEWATER SYSTEM

COLLECTION SYSTEM

The City of Custer owns and operates a gravity sewer collection system within the City limits and discharges to the wastewater treatment facility via an interceptor sewer. The collection system is routed east along South Dakota Highway 16 to the WWTF, located approximately 0.25 miles north of Highway 16 along Spring Place (see Appendix for location map). The collection system includes approximately twenty (20) miles of sewer mains, varying in diameter from 4-inch to 15-inch. There are roughly 1,000 service connections within the City's sanitary sewer network. The prevalent pipe materials found in the system are vitrified clay and PVC, while manholes are constructed of concrete, concrete brick, block and corrugated metal pipe.

In 2011 a Sanitary Sewer Assessment Inflow & Infiltration Study completed by KLJ. Allowable infiltration was calculated based on the pipe sizes and lengths to be 6,069 gpd. In the 2011 report, water usage from 2010 was used to determine the monthly water usage. It was found that the difference between the Sanitary Influent and the Water Usage + Allowable Infiltration ranged from 139,375 gpd in January to 396,520 gpd in May 2010. The study prioritized four areas for sanitary sewer main improvements. These recommended improvements to the collection system have all been completed as of 2019.

EXISTING WASTEWATER FLOWS

Influent flow records collected from the City between the years of 2014-present were used to analyze hydraulic loadings. Tourism attracts a significant number of visitors to the City of Custer during the summer months which cause peak wastewater flows during these months. In addition, wet weather events contribute to the wastewater flows through infiltration and inflow. In June 2015, the City of Custer experienced their max month with an average daily flow of 646,374 gallons per day. In July 2018, the average daily flow was 624,543 gpd.

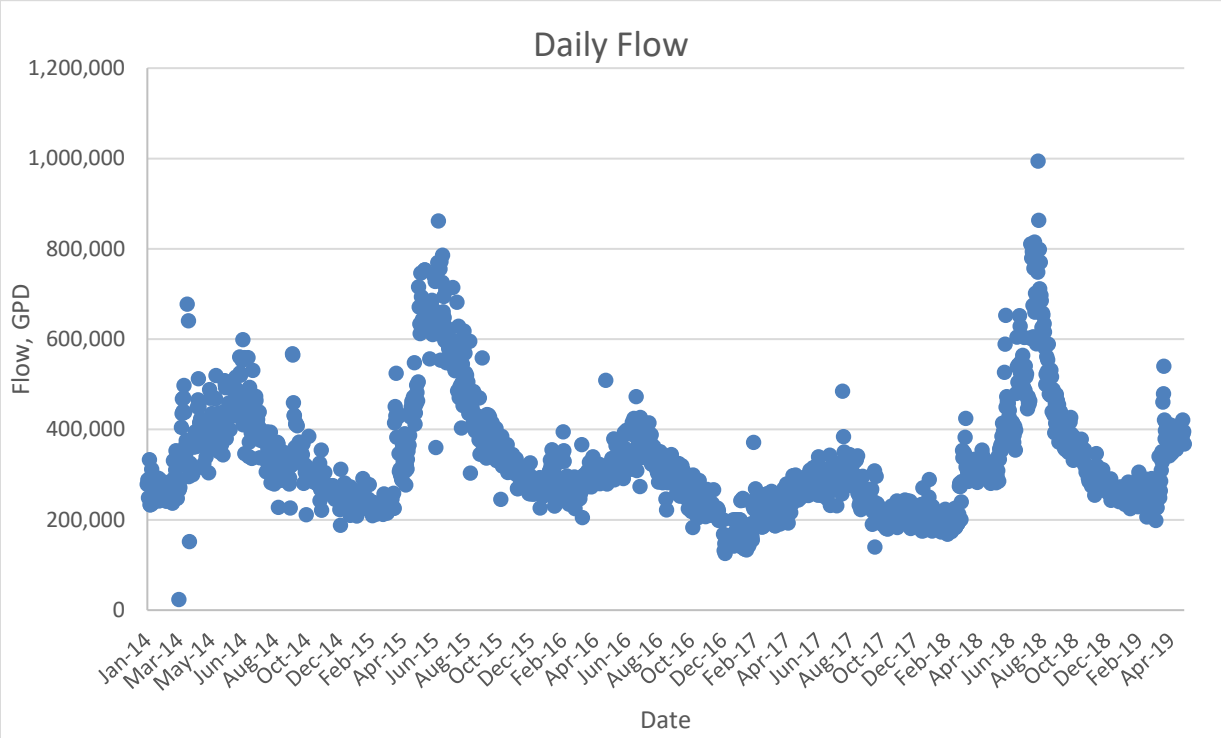

Figure 2 - Daily Influent Flow Rates

INFILTRATION AND INFLOW (I/I)

Infiltration and inflow (I&I) exist within all sanitary sewer systems. Wastewater that flows to a City's treatment system contains domestic waste, commercial waste and storm water entering into the collection system via I&I. Infiltration is clear water that seeps through cracks and joints of pipe and manholes. Inflow is clear water that comes from sump pumps, storm sewer inlets and roof drains that are connected to the sanitary sewer system. Clear water entering through open pick manholes is also considered inflow.

Generally, inflow can be seen on flow data very near to the time of the storm event, while infiltration occurs 24 hours to two weeks after the event. The 2011 study identified some sources of I&I and improvements have been made since then. However, a general overview of the recent I&I was analyzed by reviewing wastewater influent flows at the plant with rainfall events. The year 2018 was very wet, giving a lot of events to work with. The months of June 2018 through August 2018 are shown in the Flows and Precipitation Chart. In analyzing the data below, roughly

75,000 gpd can be attributed to inflow as visualized in the spikes during an event. Roughly 200,000 gpd can be attributed to infiltration as visualized on the days following a rainfall event.

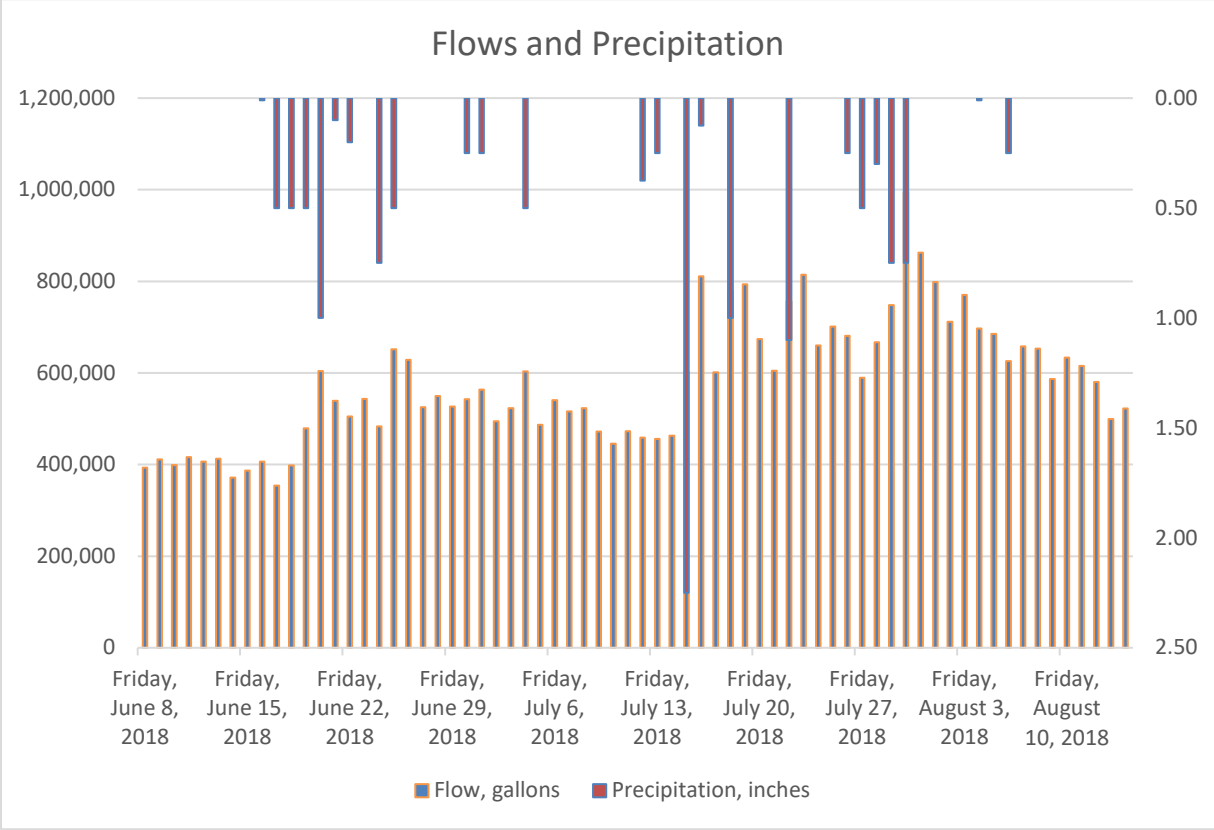

Figure 3 - Flows and Precipitation Chart

There are no known specific areas in the City that create an abnormal amount of clear water intrusion; however, as the system ages, these situations may develop. The City of Custer should consider improvements or replacement projects to help reduce the infiltration and inflow into the City's sanitary sewer system. In 2004, the City implemented an ordinance prohibiting the discharge of stormwater, surface water, groundwater, roof runoff, subsurface drainage or cooling water to any sewer except stormwater runoff from limited areas, which stormwater may be polluted at times and may be discharged to the sanitary sewer by permission of the public works director. We recommend that the city continue to monitor their collection system to identify sources of inflow and infiltration and remove any connections that are not approved by the public works director.

WASTEWATER TREATMENT

The City's wastewater treatment facility is located just east of the City and includes two (2) aerated cells, an internal lift station and four stabilization ponds located ¼ mile to the north. The City operates under Surface Water Discharge Permit No. SD0022012. A copy of the permit is located in Appendix G.

The WWTF began operation in 1972 and was upgraded in 1986 and 1994. The 1994 upgrade included the construction of Cell 4 to accommodate the design capacity of 0.565 million gallons per day (MGD). The WWTF serves both the City of Custer and the East Custer Sanitary District (ECSD). The wastewater flows to the headworks of the treatment facility by gravity from the City of Custer and is pumped from the ECSD. Primary treatment processes include a mechanically cleaned inclined screen, a partial flume for flow measurement, and two (2) aeration basins (1.4 MG each) operated in parallel. The wastewater is pumped via an internal lift station from the aeration basins to four (4) stabilization ponds located approximately one-half mile north of the treatment facility. The flow is evenly split between Cells 1 and 2, which have surface areas of 4.3 and 4.6 acres, respectively. Cell 1 operates at a depth of 10.0 feet, while Cell 2 operates at a depth of 5 feet. From the first two cells, the wastewater flows to Cell 3 and Cell 4, which are operated in series. Cell 3 is 11.7 acres and operates at a 21-foot depth, which Cell 4 is 5.6 acres and operates at a depth of 25 feet. Wastewater flows from Cell 4, by gravity, to the effluent lift station that pumps either to Flynn Creek (outfall 001A) or seasonally to a holding pond at the City's golf course (outfall 002R) for irrigation. Outfall to Flynn Creek is located in the southwest ¼ of the southwest ¼ of Section 21, Township 4 South, Range 5 East in Custer County, SD. Effluent samples are collected at the treatment facility from a valve on the effluent force main to Flynn Creek.

Compliance Inspection

Between 2009 and August 2013 there were six fecal coliform violations at Outfall 002R (golf course). A change was made with the chlorine contact time in the outfall pipe which appeared to correct this issue. In April 2014, there was a sanitary sewer overflow. In July 2015, more action was needed to sample for fecal coliform at the golf course. The April 3, 2017 off-site inspection checklist showed 1 violation for effluent BOD between 2015 and 2017.

The City of Custer has not had effluent ammonia-nitrogen limits but monitoring the discharged ammonia-nitrogen concentration has been a part of their permit. The chart below shows data from recent DMRs for ammonia nitrogen discharged to Flynn Creek from Cell 4.

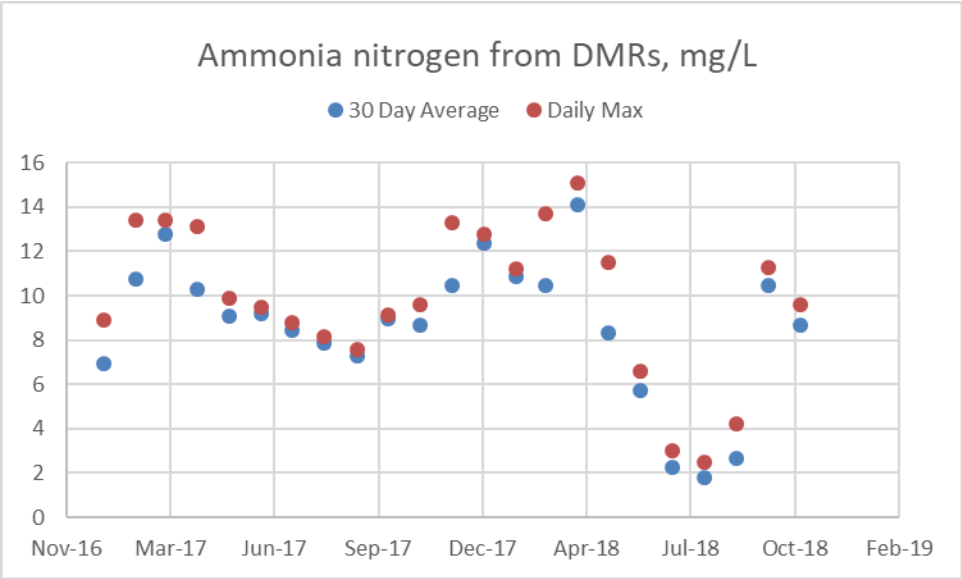

Figure 4 - Discharged Ammonia Concentration

Existing Discharge Force Main Condition and Cost

The existing effluent force main was constructed in 1985. The force main was installed using two different piping materials, class 250 pressure pipe and class 200 pressure pipe. The RTRP class 250 pressure pipe was installed in the first 14,170 feet and includes nine (9) air release manholes, seven (7) drain valves and sixteen (16) force main fittings. Class 200 PVC pressure pipe is used for the next 28,854 feet and includes nine (9) air release manholes, six (6) drain valves and thirty-eight (38) force main fittings.

The discharge force main to Flynn Creek has encountered numerous breaks, the majority of them in the RTRP pipe. The breaks typically occur at the mechanical joints. There have also been some breaks caused by rocks puncturing the pipe walls. In 2018, the City made emergency repairs to several sections of pipe. The air release valves along the force main are difficult to operate and

need to be replaced. Some of the breaks have been documented on the aerial photo below. The force main to the golf course irrigation pond ties in at the bend between break 4 and break 5 as labeled. This is at approximately 5,200 linear feet from the high lift pumps.

Figure 5 - Aerial Photo of Force Main Breaks

The first 5,000 feet of existing force main was installed in the same trench and at the same elevation as the gravity sanitary sewer. The separation between the two pipes, according to the design plans, is 12 inches. The permanent easement for the sewer and force main is 20 feet which is not enough to complete an open cut replacement without work outside the easement. Force main crossings under the stream are encased in concrete and will be difficult to replace without installing a parallel pipe and abandoning the existing pipe in place.

The effluent wastewater is pumped via high-head pumps to the existing discharge location at Flynn Creek through approximately 8.14 miles of 12” force main. As of 2019, power costs have been estimated to be roughly $60,000 per year. The pond aerators use the most energy with the interior lift station and effluent high-head pumps also contributing.

Existing Plant Condition

The existing control building is in need of HVAC repairs. The standby generator and automatic transfer switch are beyond its useful life and is in need of replacement. The spiral screen is functioning properly. The existing aerated ponds and blowers are in good condition. The facultative ponds currently experience algae blooms and can cause effluent solids problems.

Hydraulic Loading

Treatment systems are sized based on hydraulic and organic loadings. The first is the hydraulic loading or the amount of wastewater flow to the treatment facility. The Influent flow data from the City of Custer as shown above was used as well as a projected population increase to determine a proposed design flowrate. The population has been generally increasing since 1990, so a 1.1% population increase of an additional 556 people by 2040 was estimated. This additional 556 people add an additional 41,700 gpd assuming the textbook 75 gallons/cap/day. In addition, approximately 800 additional hotel guests and employees are also anticipated during the life of the facility for an additional hotel flow of 60,000 gpd based on 75 gallons/cap/day.

Table 1 - Hydraulic Loading

	Gallons per Day
Max Month (June 2015)	646,374
Population Increase	41,700
Hotel Increase	60,000
Proposed Design Flow	750,000

As of February 2019, the Max Day flow was 994,180 gpd which occurred on July 30, 2018 and a peaking factor of 2 applied to the additional population and hotel flow results in a Max Day Design Flow of 1,198,000 gpd.

The existing interior lift station flow rate of 1.44 MGD is currently a bottleneck in the treatment process. The interior lift station design flow rate proposed is 2.625 MGD, which was found by multiplying 0.75 MGD by a peaking factor of 3.5 according to 10 States Standards. Instantaneous flows have been higher than 2.625 MGD recently but with the entire system flows can be spread out so that the peak hour leaving the interior lift station of 2.625 MGD can be used. An interior lift station upgrade to 2.625 MGD would allow the existing four cell ponds to be used.

Organic Loading

The second sizing method is organic loading, or the waste constituents present in the wastewater. Chapter I.C.2 of the South Dakota Design Criteria states that a person will generate 0.17 pounds of BOD_5 per day. The future organic loading for the treatment system based on these requirements are shown in the following table. The table indicates the system has adequate capacity for BOD_5 loading based on the assumed SD Design Criteria loading. The City should do composite sampling to verify the actual loading if the system starts to have higher than normal odor issues.

Table 2 - Organic Loading

2019 Population	2,124
Growth Rate (per year)	1.1%
Number of Periods	22
2040 Estimated Population	3,480

		AWW - 30	**MWW**	
Flow, gpd		750,000	1,200,000	
	Average		**Max**	
	(mg/L)	(#/day)	(mg/L)	(#/day)
BOD	95	592	59	592
TSS	111	696	70	696
TKN	20	125	13	125

WASTEWATER EFFLUENT LIMITATIONS

The City's limits in their Surface Water Discharge Permit dated July 2015 and expiring in May 2018 are shown in the following table.

Table 3 - Existing Effluent Limits

Effluent Limits - Outfall 001A (Flynn Creek)

	30-Day Average	7-Day Average	Daily Maximum
BOD5 (mg/L)	30	45	N/A
Total Suspended Solids (mg/L)	30	45	N/A
pH	6.5-9.0		

Effluent Limits- Outfall 002R (Golf Course)

	30-Day Average	7-Day Average	Daily Maximum
BOD5 (mg/L)	30	45	N/A
Total Suspended Solids (mg/L)	30	45	N/A
Fecal Coliform (#/100mL)	20	N/A	100
pH	6.5-9.0		

The City will likely have new effluent limits depending on the treatment alternative and discharge alternative selected and permitted.

The existing discharge to Flynn Creek (Outfall 001A) states that no chemicals, such as chlorine, shall be used without prior written permission. The existing discharge to the golf course location (Outfall 002R) has additional permit requirements that surface runoff and standing water must be prevented. Land application is not permitted during heavy rainfall or ground saturation. The City should continue to monitor the quality of treatment that the system is providing.

The majority of the effluent is discharged to Flynn Creek, with the golf course taking effluent flow as irrigation as needed. In 2018, significantly less flow was discharged to the golf course than in 2016 and 2017 due to seasonal wet weather.

Table 4 - Total Annual Flow to Golf Course

Year	MG
2015	8.73
2016	12.52
2017	12.35
2018	5.83

FUTURE WASTEWATER CONDITIONS

It is anticipated that the population of the City of Custer will increase based on historic population data since 1980. With the number of breaks in the force main and the existing facility experiencing influent flows higher than the system is designed for, several options are considered. Since a portion of the force main is in need of replacement, it is advantageous to consider an alternate discharge location in an attempt to save on pumping costs and future capital costs (if the entire force main needed replacement in the future). Three alternative discharge locations are discussed, all having different effluent requirements.

Future Effluent Limits – Discharge to French Creek

One alternative discharge location would be to French Creek, just south of Stockade Lake. Based on discussions with South Dakota DENR, discharging to French Creek would be a new discharge outfall location so antidegradation would apply. For a proposed design flow of 0.75 MGD, effluent limits were calculated by DENR in regard to antidegradation. The 30-day average ammonia limit for each month expected based on communication with DENR in 2019 is in the table below. The 30-day geometric mean *E. coli* limit would be 259 #/100mL from May 1 through September 30.

Table 5 - Antidegradation Limits for French Creek

Months of the Year	30-Day Average Ammonia Effluent Limit
May - June	0.2 mg/L
July – August	0.3 mg/L

September – October	0.4 mg/L
November – April	0.6 mg/L

Public Approval Required Effluent Limits for French Creek

A conference call between DENR and DGR Engineering on October 29, 2019 discussed the steps required for the SD DENR to approve higher effluent limits which would cause degradation of French Creek. The process requires an analysis of the socio-economic impacts of treating the wastewater to the antidegradation limits. French Creek is a Tier 2 waterbody and SD DENR did calculate the following effluent limits that would keep French Creek from falling below the water quality standards for the existing designated uses. The population in the area is very protective of their cold-water fisheries, so a socio-economic analysis is recommended to be presented to the public if a discharge to French Creek is desired by the City of Custer.

Table 6 - Existing Designated Uses Limits for French Creek

Months of the Year	30-Day Average Ammonia Effluent Limit
May - June	1.4 mg/L
July – August	1.0 mg/L
September –April	2.5 or 3.0 mg/L

Future Effluent Limits – Existing Discharge location of Flynn Creek

Flynn Creek is the existing treatment facility discharge location, meaning antidegradation does not apply to this discharge location. For a proposed discharge flow of 0.75 MGD, water-quality based effluent limits for ammonia would apply. DENR indicated a 30-day average ammonia limit of 1 to 2 mg/L with a 2 to 4 mg/L daily maximum. Furthermore, it was indicated *E. coli* limits would be 630 #/100 mL 30-day geometric mean and 1,178 #/100mL daily maximum.

Table 7 - Flynn Creek Effluent Limits Next Permit Cycle

Months of the Year	30-Day Average Ammonia Effluent Limit
May – August	1.0 mg/L
September –April	2.0 mg/L

Future Effluent Limits – Discharge location of Beaver Creek

The third discharge location alternative would be to discharge effluent wastewater to the Beaver Creek watershed. Beaver Creek does not have cold water fishery restrictions until the stream reaches Pringle, therefore the City's current effluent limits would remain in place for at least the next two permit cycles. It is unknown whether a future more stringent effluent limit would apply to Beaver Creek. For purposes of this analysis the assumption was made that a future treatment improvement would be needed after two permit cycles or 10 years. We assumed an equivalent to the level of treatment needed in Beaver Creek as for a discharge to Flynn Creek. The SD DENR has stated that the Beaver Creek limits would be the same as the existing limits shown in the following table.

Table 8 - Beaver Creek Effluent Limits

	30-Day Average	**7-Day Average**	**Daily Maximum**
BOD5 (mg/L)	30	45	N/A
Total Suspended Solids (mg/L)	30	45	N/A
pH	6.5-9.0		
Ammonia Nitrogen	Monitor only		

DEVELOPMENT OF WASTEWATER ALTERNATIVES

DEVELOPMENT OF ALTERNATIVES

The following alternatives were developed to correct the deficiencies that were identified for the City of Custer. Each alternative includes a description of the project, location map, cost estimate and present worth analysis. The cost estimates include construction, contingencies, engineering, testing, legal and financing.

PRESENT WORTH ANALYSIS

When analyzing the capital cost for each alternative, it is also worthwhile to consider the present worth analysis. The reason for this is because the lowest capital cost alternative may not be the most cost effective when operation and maintenance are taken into consideration. In addition, the SD DENR requires that a present worth analysis be completed for each alternative. For the purpose of this plan, the present worth analysis or equivalent uniform annual cost (EUAC) considers the capital cost, salvage value, and operation and maintenance over a 20-year period with an interest rate of 3%.

WASTEWATER COLLECTION

As was previously mentioned, the collection system was analyzed in 2011 and improvements have been made since then. The City did not note any current deficiencies.

Collection System Alternative #1 – No Action

The first alternative is “No Action”. This alternative will not correct any of the deficiencies that are found in the system in the future.

Collection System Alternative #2 – Continue to Repair System

This alternative would be to correct deficiencies as they become present in the collection system.

DISCHARGE LOCATION

The existing treatment facility pumps effluent wastewater approximately eight (8) miles to an outfall pipe to Flynn Creek, or seasonally to the golf course for irrigation. Due to the extensive pumping requirements to discharge to Flynn Creek and re-occurring force main breaks, an alternate discharge location evaluation was recommended. After consultation with the SD DENR, the following discharge location alternatives were developed. Note: each discharge alternative will continue to utilize the golf course irrigation for seasonal discharge. See Appendix for discharge alternative location map.

Discharge Location Alternative #1 – Utilize Existing Discharge Location-Flynn Creek

This alternative would utilize the existing discharge location and existing high lift pumps. It includes approximately 430’ of static head and approximately eight (8) miles of force main.

Discharge Location Alternative #2 – New Discharge Location – Beaver Creek Airport

This alternative would be to move the primary discharge location to the Beaver Creek water shed. The discharge location near the Custer County Airport would provide a shorter force main route than Alternative #1.

Discharge Location Alternative #3 – New Discharge Location – Beaver Creek Sidney Park

This alternative would be to move the discharge location near Sidney Park Road at the intersection of Flynn Creek Road in the Beaver Creek water shed.

Discharge Location Alternative #4 – New Discharge Location-French Creek

The fourth alternative would be to utilize a discharge location on French Creek just the downstream of Stockade Lake.

WASTEWATER TREATMENT

The existing treatment consists of a spiral screen, aerated ponds, interior lift station, four cell facultative pond, and discharge lift station. When effluent is discharged to the golf course for irrigation, chlorination is used for disinfection.

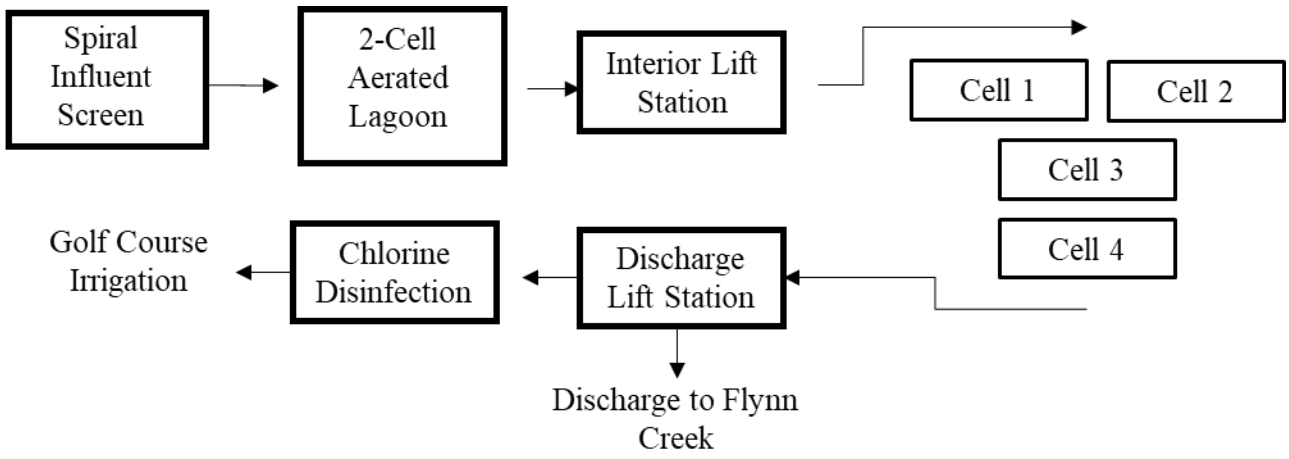

Figure 6 - Existing Wastewater Treatment System Schematic

Below is a list of deficiencies for the wastewater treatment and discharge system.

1. The existing effluent force main is inadequate and has experienced numerous failures during its useful life.
2. It has been explained that the existing discharge location will require more stringent discharge limits based on its location.
3. The facility has aging infrastructure that is in need of repair to keep the plant operational. All alternatives, excluding the "No Action" alternative, will include the facility infrastructure improvements. The items are:
    - Control Building HVAC Repair
    - Standby Generator and ATS Replacement
    - SCADA System Improvements
    - Pond Level Indicator Rehabilitation
    - Pond Algae Control
    - Interior Lift Station and Force Main Replacement
    - Effluent Lift Station and Force Main Replacement
    - A control building expansion would be needed to accommodate lift station modifications.

Additional treatment alternatives are analyzed below to improve effluent water to levels that are anticipated within the watersheds. A discharge to French Creek which requires the least amount of force main and effluent lift station pumping capacity also requires the highest level of treatment needing to meet an effluent limit of 0.2 mg/L (most stringent month) for ammonia if no degradation is allowed, or a limit of 1.0 mg/L (most stringent month) if there is socio-economic justification. The existing discharge location to Flynn Creek will need to meet 1-2 mg/L for ammonia in the future. There are several pond retrofit options to achieve 1.0 mg/L for effluent ammonia, most notably Submerged Growth Attached Reactor (SAGR), LemTec Polishing Reactor as well as some mechanical treatment options. However, the 0.2 mg/L at French Creek would require tertiary treatment after the secondary biological treatment process. Tertiary treatment alternatives have the potential to introduce additional chlorine if Breakpoint Chlorination is used, or the potential to introduce sodium if ion exchange were considered. Tertiary biological treatment was not analyzed as equipment manufacturers were reluctant to give a treatment guarantee for a 0.2 mg/L ammonia nitrogen effluent limit.

Wastewater Treatment Alternative A – No Action

Treatment alternative A is No Action. This alternative allows the existing plant to continue to age and does not prepare the City for more stringent effluent limits at their existing discharge location that DENR has indicated are going to be implemented.

Wastewater Treatment Alternative B – Existing Plant Improvements

This alternative makes improvements needed at the plant to continue to meet the existing effluent limits but does not help meet future effluent limits needed for Flynn Creek and French Creek.

Wastewater Treatment Alternative C – Submerged Attached Growth Reactor

The addition of a submerged attached growth reactor (SAGR) system would allow the WWTF to adequately treat the wastewater to achieve compliance with a 1 mg/L ammonia nitrogen effluent limit. A SAGR system is designed to be utilized as a polishing step following traditional aerated lagoon systems for additional nitrification to remove ammonia, particularly in colder winter months when ammonia removal becomes more difficult. The system includes a synthetic liner, aeration lines, rock media, an insulating mulch layer, control structures, and other related piping.

The SAGR system would be built on city owned property west of the existing aerated lagoons. The existing inlet works building would house the new blowers if possible, otherwise a building addition or a new blower building would be constructed. The aerated lagoons and SAGR system could be followed by an ultraviolet disinfection system for E. coli treatment before the wastewater is discharged. A schematic drawing is shown called Alternative C SAGR Schematic.

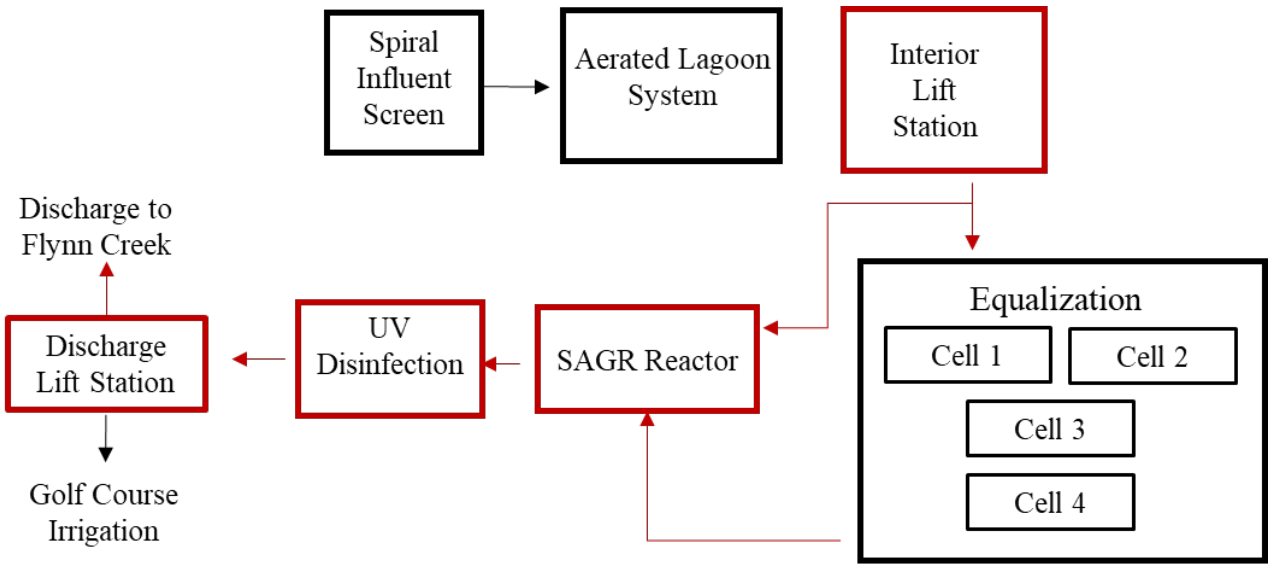

Figure 7 - Alternative C-SAGR Schematic

Wastewater Treatment Alternative D – Aerated LemTec Polishing Reactor

Construction of a LemTec system would also allow the WWTF to adequately treat the wastewater and achieve proposed effluent ammonia limits. The system requires installation of floating, insulated covers over new or existing aerated lagoons, followed by an aerated Lemna polishing reactor for additional nitrification to meet ammonia limits. The LemTec system would be followed by a UV disinfection system for E. coli treatment before the wastewater is discharged. Aerated lagoon improvements would be constructed, followed by the Lemna polishing reactor and a UV disinfection system. This would be constructed west of the existing treatment facility.

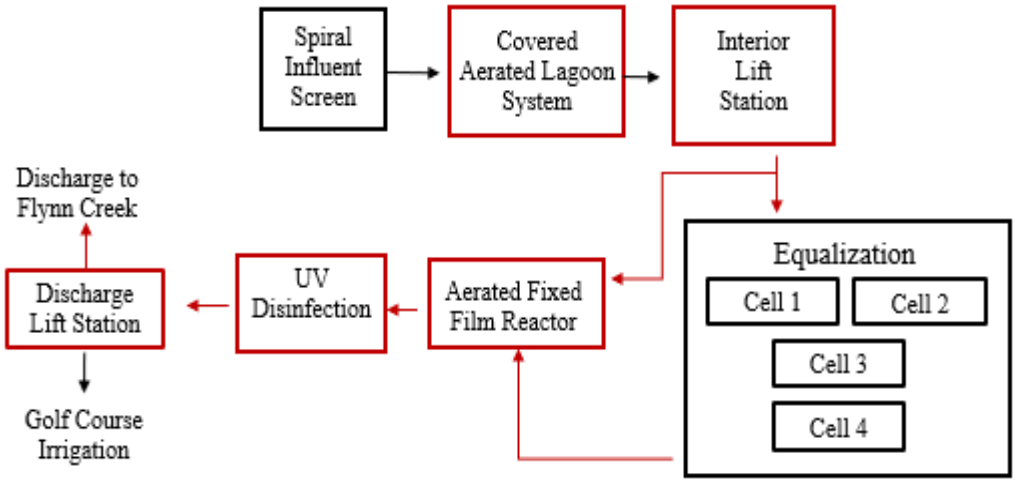

Figure 8 - Alternative D LemTec Schematic

Wastewater Treatment Alternative E– Xylem Sanitaire Flow Through Sequencing Batch Reactor

The Xylem Sanitaire ICEAS SBR is different than a conventional activated sludge plant. There is not a need for primary or secondary settlement tanks. All treatment is done is a single basin. Treatment occurs in three phases: react phase, settle phase, and decant phase. In the react phase, screened and de-gritted wastewater flows continuously into the pre-react zone and enters the main react zone through submerged ports in a non-hydrostatic baffle wall. Biological oxidation and reduction occur though aeration, anoxic and anaerobic sequences. Then during the settle phase, basin agitation from the react phase is stopped to allow solids to settle to the bottom of the basin. Raw wastewater continues to flow into the pre-react zone while the main react zone settles. As the solids settle, a clear layer of water develops in the top of the basin. During the decant phase, the clear water is drawn off the top and waste activated sludge is also removed from the basin. In summary, an SBR requires two basins, one pre-react basin that is accepting influent flow continuously and another basin where sequencing of aeration on and off provides a treatment environment followed by a settling and decanting phase.

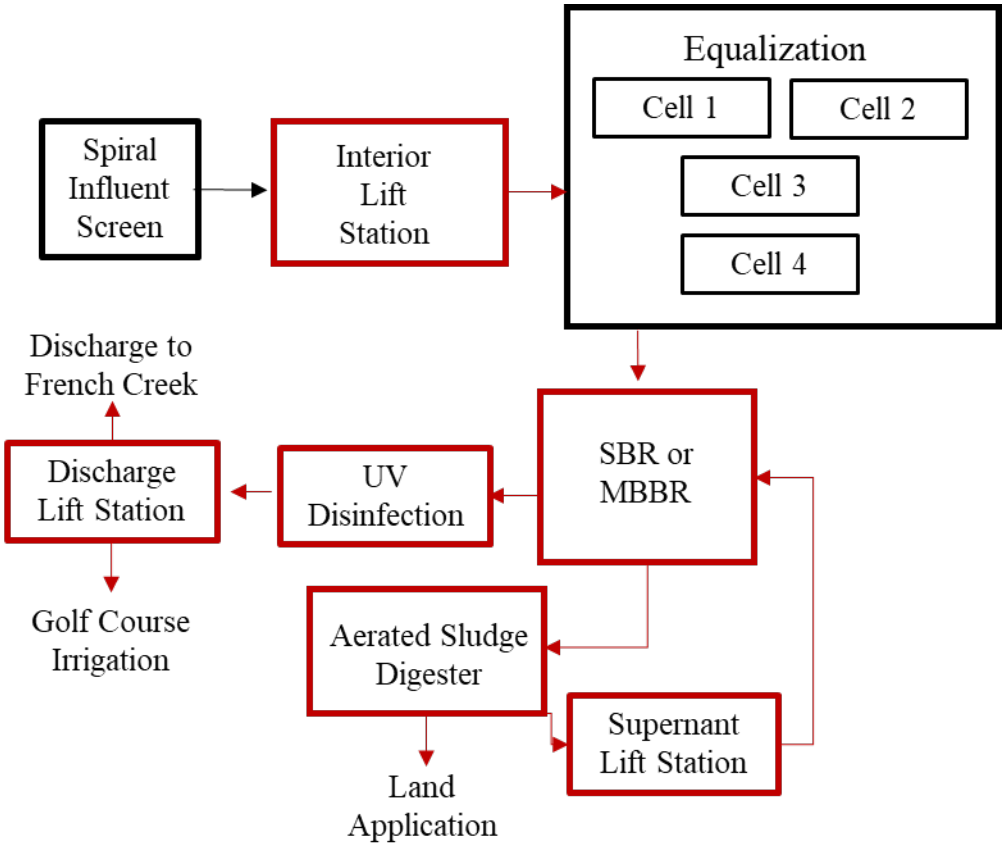

Figure 9 - Alternative No. E or F-SBR or MBBR Schematic

Wastewater Treatment Alternative F – Veolia Moving Bed Biofilm Reactor

A Moving Bed Biofilm Reactor (MBBR) provides an environment where the ANITA Mox process can occur. This process has 2 steps: aerobic nitritation and anoxic ammonia oxidation performed by anammox bacteria. These two steps are taking place in a one-stage biofilm process in different layers of the biofilm: nitritation (aerobic) in the outer layer of the biofilm, and anammox (anoxic) in the inner layer. Specific conditions for pH, temperature, and oxygen level are maintained within the reactor to allow the growth of process specific bacteria on AnoxKaldnes carrier media.

EVALUATION OF WASTEWATER ALTERNATIVES

WASTEWATER COLLECTION ALTERNATIVE EVALUATION

Collection System Alternative #1 – No Action

Collection System Alternative #1 "No Action" is not recommended. This alternative will not address any of the deficiencies with the existing force main.

Collection System Alternative #2 – Continue to Repair System

This alternative will continue to combat infiltration and inflow into the existing collection system through repairs to existing manholes and sewer pipes. Repairs to the system will reduce the wet weather flows to the treatment facility and allow for additional growth.

DISCHARGE LOCATION ALTERNATIVE EVALUATION

The following alternatives have cost estimates and a map in Appendix A.

Discharge Location Alternative #1 – Flynn Creek

This alternative would be to keep the existing discharge location that is approximately eight (8) miles away from the existing treatment facility. It was indicated by South Dakota DENR staff that existing permit limits would remain in place through the next permit cycle and then the City would likely get additional effluent ammonia limits and potentially more stringent existing limits. Due to the significant distance and elevation differences, the existing Flynn Creek discharge location requires extensive pumping, resulting in high operation costs. In addition, maintenance on the existing force main has been extensive as a result of high force main pressure. This alternative would still utilize the existing discharge of treated wastewater on the City's golf course.

Discharge Location Alternative #2 – New Discharge Location – Beaver Creek Airport

This discharge alternative would be to move the discharge location to the Beaver Creek watershed near the Custer County Airport. Since this location does not have a cold-water fishery classification, the treatment facilities existing permit limits would remain in place and it would provide the least stringent discharge limits of the options considered. In addition, this alternative would require less extensive pumping requirements and a shorter force main length. However,

this alternative would create a stream of wastewater with the same effluent qualities as the existing discharge that current landowners are not presently experiencing. In addition, downstream tourist attractions would also experience this additional waste stream that may cause some socioeconomical impacts. It is assumed that a future effluent limit might be imposed on a discharge to Beaver Creek.

Discharge Location Alternative #3 – New Discharge Location – Beaver Creek Sidney Park

This alternative would be to move the discharge location to the Beaver Creek water shed near the intersection of Sydney Park Road and Flynn Creek Road. This alternative would result in a shorter force main than the existing discharge location and less pumping requirements. However, the same environmental and social factors as the airport location within the Beaver Creek water shed as this would present a new waste stream the existing property owners are not currently experiencing.

Discharge Location Alternative #4 – New Discharge Location-French Creek

This discharge alternative would be to move the discharge location to French Creek, just downstream of Stockade Lake. The discharge elevation would decrease the static head on the pumps and would shorten the force main route from the existing lift station to an estimated 3.5 miles. French Creek is classified as a cold-water fishery, so it was indicated that the effluent limits would be more stringent and antidegradation analysis would be required due to changing discharge locations. The stringent limits were calculated based on no degradation of the receiving stream. The indicated limits would be difficult to meet with any primary treatment unit. However, based on conversations with the SD DENR, the City could work through a Socio-economic Analysis to determine if the benefit of discharging to French Creek outweighs the impacts, and thus allowing degradation of the stream. The effluent limits would then be calculated based on water quality-based limits, which many primary treatment options would be able to accommodate.

WASTEWATER TREATMENT ALTERNATIVE EVALUATION

Wastewater Treatment Alternative A – No Action

Wastewater Treatment Alternative A “No Action” is not recommended. This alternative will not address any of the deficiencies that were identified at the existing plant.

Wastewater Treatment Alternative B – Existing Plant Improvements

The existing wastewater treatment plant has outlived its useful life and there are improvements needed to the HVAC, SCADA, Generator. With these improvements the City would still experience algae problems on their facultative ponds. This alternative does not prepare the City to meet effluent limits at the existing discharge location in Flynn Creek that the SD DENR has stated will be changing on the next permit cycle.

Table 9 – Opinion of Probable Cost for Wastewater Treatment Alternative B

Item No.	Description	Quantity	Unit	Unit Price	Price
1	Electrical/SCADA/Controls Improvements	1	LS	$65,000.00	$65,000
2	HVAC	1	LS	$60,000.00	$60,000
3	Standby Generator	1	LS	$200,000.00	$200,000
4	Automatic Transfer Switch	1	LS	$20,000.00	$20,000
				Subtotal:	$345,000
				Contingencies (15%):	$52,000
				Total Estimated Construction Cost:	**$397,000**
				ENGINEERING	**$59,600**
				LEGAL, ADMINISTRATION & TESTING (4%)	**$2,100**
				TOTAL ESTIMATED PROJECT COST:	**$458,700**

The following alternatives are for an effluent limit of 1-2 mg/L ammonia. The following cost estimates include an estimate for a SAGR, Sequencing Batch Reactor, and a Moving Bed Bioreactor. The SAGR alternative is the simplest design from an operation standpoint. The SBR and MBBR estimates are provided to compare to a SAGR.

Wastewater Treatment Alternative C – Submerged Attached Growth Reactor

The Submerged Attached Growth Reactor (SAGR) in this estimate is for a design flow of 0.75 MGD. It assumes that the interior lift station would pump to the existing ponds to be used for equalization during and flow would return by gravity to the SAGR when flows subside. It also

assumes the aerated ponds would continue to remove BOD and TSS prior to the SAGR system. The SAGR alternative would include UV Disinfection prior to discharge.

Table 10 – Opinion of Probable Cost for Wastewater Treatment Alternative C-SAGR

Item No.	Description	Quantity	Unit	Unit Price	Price
1	Mobilization	1	LS	$274,800.00	$274,800
2	Bypass Pumping	1	LS	$10,000.00	$10,000
3	Lift Station	1	LS	$160,000.00	$160,000
4	6" PVC Force Main	770	LF	$30.00	$23,100
5	Air Release Manhole	1	EA	$5,000.00	$5,000
6	SAGR Equipment	1	LS	$963,900.00	$963,900
7	SAGR Equipment Installation	1	LS	$176,200.00	$176,200
8	SAGR Controls	1	LS	$25,000.00	$25,000
9	SAGR Dirtwork	24,800	CY	$3.50	$86,800
10	Rock Excavation	1,750	CY	$250.00	$437,500
11	Wall framing and sheathing	1,416	LF	$35.00	$49,600
12	Uniform graded clean rock media	12,100	CY	$45.00	$544,500
13	Insulating wood chips	1,590	CY	$18.00	$28,700
14	Non-woven geotextile (8 oz)	97,240	SF	$0.25	$24,400
15	HDPE liner (60mil)	56,410	SF	$1.50	$84,700
16	Aeration supply piping	1	LS	$25,000.00	$25,000
17	SAGR Influent Splitter Structure	1	EA	$7,500.00	$7,500
18	SAGR Transfer Piping and Valves	1	LS	$42,600.00	$42,600
19	SAGR Transfer Manholes	4	EA	$5,000.00	$20,000
20	UV Equipment	1	LS	$115,000.00	$115,000
21	UV Equipment Installation	1	LS	$57,500.00	$57,500
22	UV Building Upgrades	1	LS	$225,000.00	$225,000
23	SAGR Building	500	SF	$180.00	$90,000
24	Building Electrical and HVAC	1	LS	$50,000.00	$50,000
25	8" PVC Outfall	550	LF	$40.00	$22,000
26	Outfall Manholes	2	EA	$5,000.00	$10,000
27	Headwall Structure	1	EA	$5,000.00	$5,000
28	Gravel Surfacing	165	Ton	$30.00	$5,000
29	Utility Services	1	LS	$40,000.00	$40,000
30	SAGR Standby Generator Upgrade	1	EA	$50,000.00	$50,000
31	Fencing	1,300	LF	$25.00	$32,500
32	Compliance w/ SWPPP	1	LS	$6,000.00	$6,000
33	Salvage & Place Topsoil	600	CY	$3.00	$1,800
33	Seeding, Fertilizing, Mulching	1	LS	$10,550.00	$10,550
				Subtotal:	$3,709,650
				Contingencies (15%):	$557,000
				Total Estimated Construction Cost:	**$4,266,650**
				ENGINEERING	**$681,600**
				LEGAL, ADMINISTRATION & TESTING (4%)	**$170,700**
				TOTAL ESTIMATED PROJECT COST:	**$5,398,950**

EUAC for Treatment Alternative C 3.0% interest 20 term

SAGR

Description	Price	Salvage Value	Present Worth of Salvage Value	Net Present Worth
Mobilization	$274,800.00	$0.00	$0.00	$274,800.00
Bypass Pumping	$10,000.00	$0.00	$0.00	$10,000.00
Lift Station	$160,000.00	$96,000.00	$53,152.87	$106,847.13
6" PVC Force Main	$23,100.00	$13,860.00	$7,673.95	$15,426.05
Air Release Manhole	$5,000.00	$2,000.00	$1,107.35	$3,892.65
SAGR Equipment	$963,900.00	$481,950.00	$266,844.03	$697,055.97
SAGR Equipment Installation	$176,200.00	$0.00	$0.00	$176,200.00
SAGR Controls	$25,000.00	$15,000.00	$8,305.14	$16,694.86
SAGR Dirtwork	$86,800.00	$0.00	$0.00	$86,800.00
Rock Excavation	$437,500.00	$0.00	$0.00	$437,500.00
Wall framing and sheathing	$49,600.00	$0.00	$0.00	$49,600.00
Uniform graded clean rock media	$544,500.00	$326,700.00	$180,885.87	$363,614.13
Insulating wood chips	$28,700.00	$5,740.00	$3,178.10	$25,521.90
Non-woven geotextile (8 oz)	$24,400.00	$0.00	$0.00	$24,400.00
HDPE liner (60mil)	$84,700.00	$0.00	$0.00	$84,700.00
Aeration supply piping	$25,000.00	$10,000.00	$5,536.76	$19,463.24
SAGR Influent Splitter Structure	$7,500.00	$4,500.00	$2,491.54	$5,008.46
SAGR Transfer Piping and Valves	$42,600.00	$25,560.00	$14,151.95	$28,448.05
SAGR Transfer Manholes	$20,000.00	$12,000.00	$6,644.11	$13,355.89
UV Equipment	$115,000.00	$46,000.00	$25,469.08	$89,530.92
UV Equipment Installation	$57,500.00	$0.00	$0.00	$57,500.00
UV Building Upgrades	$225,000.00	$135,000.00	$74,746.23	$150,253.77
SAGR Building	$90,000.00	$36,000.00	$19,932.33	$70,067.67
Building Electrical and HVAC	$50,000.00	$15,000.00	$8,305.14	$41,694.86
8" PVC Outfall	$22,000.00	$13,200.00	$7,308.52	$14,691.48
Outfall Manholes	$10,000.00	$6,000.00	$3,322.05	$6,677.95
Headwall Structure	$5,000.00	$3,000.00	$1,661.03	$3,338.97
Gravel Surfacing	$5,000.00	$1,500.00	$830.51	$4,169.49
Utility Services	$40,000.00	$0.00	$0.00	$40,000.00
SAGR Standby Generator Upgrade	$50,000.00	$20,000.00	$11,073.52	$38,926.48
Fencing	$32,500.00	$13,000.00	$7,197.78	$25,302.22
Compliance w/ SWPPP	$6,000.00	$0.00	$0.00	$6,000.00
Salvage & Place Topsoil	$1,800.00	$0.00		
Seeding, Fertilizing, Mulching	$10,550.00	$0.00	$0.00	$10,550.00
Remaining Capital Costs	$1,409,300.00	$0.00	$0.00	$4,672,000.00
Total Project Cost	$5,118,950.00	$1,282,010.00	$709,817.85	$7,670,032.15
O&M Cost	$99,580.00			$1,481,498.95
Sludge Disposal	$10,000.00			$148,774.75
Total Annual Cost	**$ 109,580**			**$1,630,274**
			Total Net Present Worth	**$9,300,306**
			EUAC	**$625,127**

Wastewater Treatment Alternative D – Aerated LemTec Polishing Reactor

The Aerated LemTec Polishing Reactor cost estimate was not received from the manufacturer at the time this report was completed. This cost is typically similar or slightly higher than a SAGR due to the covers for the aerated lagoons.

Wastewater Treatment Alternative E – Sequencing Batch Reactor

The existing operation of the plant changes a lot with the addition of a Sequencing Batch Reactor. A description of this process is included earlier in this report.

Table 11 – Opinion of Probable Cost for Wastewater Treatment Alternative E-SBR

Item No.	Description	Quantity	Unit	Unit Price	Price
1	Mobilization	1	LS	$397,000.00	$397,000
2	Clearing and Grubbing	1	LS	$5,000.00	$5,000
3	Blower Building	1	LS	$140.00	$140
4	Gravel Surfacing	300	TON	$15.00	$4,500
5	Lift Station	1	LS	$160,000.00	$160,000
6	Rock Excavation	8,000	CY	$250.00	$2,000,000
12	Excavation	1	LS	$100,000.00	$100,000
7	6" PVC Force Main	770	LF	$30.00	$23,100
8	Air Release Manhole	1	EA	$5,000.00	$5,000
9	8" PVC Outfall	550	LF	$40.00	$22,000
10	Outfall Manholes	2	EA	$5,000.00	$10,000
11	Headwall Structure	1	EA	$5,000.00	$5,000
13	Splitter Structure	1	EA	$30,000.00	$30,000
14	SBR Site Preparation	1	LS	$150,000.00	$150,000
15	Sequencing Batch Reactor	1	LS	$1,675,000.00	$1,675,000
16	UV Disinfection	1	LS	$397,500.00	$397,500
17	SBR Building	500	SF	$180.00	$90,000
18	Building Electrical and HVAC	1	LS	$50,000.00	$50,000
19	SBR SCADA Upgrade	1	LS	$75,000.00	$75,000
20	Electrical Service	1	LS	$40,000.00	$40,000
21	SBR Standby Generator Upgrade	1	LS	$90,000.00	$90,000
22	Compliance w/ SWPPP	1	LS	$6,000.00	$6,000
22	Salvage & Place Topsoil	1,500	CY	$3.00	$4,500
23	Seeding, Fertilizing & Mulching	1	LS	$10,550.00	$10,550
				Subtotal	$5,350,290
				Contingencies (15%)	$802,710
				Total Estimated Construction Costs	**$6,153,000**
				ENGINEERING	**$1,310,600**
				LEGAL, ADMINISTRATION & TESTING (4%)	**$247,000**
				TOTAL ESTIMATED PROJECT COST	**$7,710,600**

EUAC for Treatment Alternative E 3.0% interest 20 term
SBR

Description	Capital Cost Price	Salvage Value	Present Worth of Salvage Value	Net Present Worth
Mobilization	$408,000	$0	$0	$408,000
Clearing and Grubbing	$5,000	$0	$0	$5,000
Blower Building	$140,000	$56,000	$31,006	$108,994
Gravel Surfacing	$4,500	$0	$0	$4,500
Lift Station	$160,000	$80,000	$80,000	$80,000
Rock Excavation	$2,000,000	$0	$0	$2,000,000
Excavation	$100,000	$0	$0	$100,000
6" PVC Force Main	$23,100	$0	$0	$23,100
Air Release Manhole	$5,000	$2,000	$2,000	$3,000
8" PVC Outfall	$22,000	$13,200	$13,200	$8,800
Outfall Manholes	$10,000	$0	$0	$10,000
Headwall Structure	$5,000	$0	$0	$5,000
Splitter Structure	$30,000	$18,000	$9,966	$20,034
SBR Site Preparation	$150,000	$90,000	$49,831	$100,169
Sequencing Batch Reactor	$1,675,000	$1,005,000	$556,444	$1,118,556
UV Disinfection	$397,500	$238,500	$132,052	$265,448
SBR Building	$90,000	$54,000	$29,898	$60,102
Building Electrical and HVAC	$50,000	$30,000	$16,610	$33,390
SBR SCADA Upgrade	$75,000	$45,000	$24,915	$50,085
Electrical Service	$40,000	$24,000	$13,288	$26,712
SBR Standby Generator Upgrade	$90,000	$54,000	$29,898	$60,102
Compliance w/ SWPPP	$6,000	$0	$0	$6,000
Salvage & Place Topsoil	$4,500	$0	$0	$4,500
Seeding, Fertilizing & Mulching	$10,550	$0	$0	$10,550
Remaining Capital Costs	$2,427,550	$0	$0	$2,427,550
Total Construction Cost	**$7,928,700**	**$1,709,700**	**$989,110**	**$6,939,590**

Annual Operation and Maintenance Cost

Description	Annual Cost	Net Present Worth
Equipment	$4,000	$59,510
Supplies	$10,000	$148,775
Utilities	$100,000	$1,487,747
Additional Wastewater Sampling	$40,000	$595,099
Sludge Disposal	$10,000	$148,775
Labor (new employee half time)	$50,000	$743,874
Total Annual Cost	**$214,000**	**$3,183,780**
	Total Net Present Worth	**$10,123,370**
	EUAC	**$680,449**

Wastewater Treatment Alternative F – Moving Bed BioReactor

The existing operation of the plant changes a lot with the addition of a Moving Bed BioReactor. A description of this process is included earlier in this report.

Table 12 – Opinion of Probable Cost for Wastewater Treatment Alternative F-MBBR

Item No.	Description	Quantity	Unit	Unit Price	Price
1	Mobilization	1	LS	$508,000.00	$508,000
2	Clearing	1	LS	$5,000.00	$5,000
3	Inlet Building Improvements	1	LS	$250,000.00	$250,000
4	Gravel Surfacing	300	TON	$15.00	$4,500
5	Convert Sludge Basins	1	LS	$100,000.00	$100,000
6	Lift Station	1	LS	$160,000.00	$160,000
7	Rock Excavation	8,000	CY	$250.00	$2,000,000
8	6" PVC Force Main	770	LF	$30.00	$23,100
9	Air Release Manhole	1	EA	$5,000.00	$5,000
10	8" PVC Outfall	550	LF	$40.00	$22,000
11	Outfall Manholes	2	EA	$5,000.00	$10,000
12	Headwall Structure	1	EA	$5,000.00	$5,000
13	12" PVC Gravity Sewer	1,000	FT	$45.00	$45,000
14	12" Gate Valve & Box	2	EA	$3,500.00	$7,000
15	12" Sanitary Bedding Material	1,000	FT	$5.00	$5,000
16	Connect to Existing Force Main	1	EA	$2,500.00	$2,500
17	Connect to Existing Outfall Line	1	EA	$2,500.00	$2,500
18	Sanitary Manhole	4	EA	$3,500.00	$14,000
19	Splitter Structure	1	EA	$30,000.00	$30,000
20	MBBR Site Preparation	1	LS	$150,000.00	$150,000
21	Moving Bed Bioreactor	1	LS	$2,741,175.00	$2,741,175
22	UV Disinfection	1	LS	$395,000.00	$395,000
23	SCADA System	1	LS	$75,000.00	$75,000
24	SBR Building	500	SF	$180.00	$90,000
25	Building Electrical and HVAC	1	LS	$50,000.00	$50,000
26	Electrical Service	1	LS	$40,000.00	$40,000
27	MBBR Standby Generator Upgrade	1	LS	$90,000.00	$90,000
28	Salvage & Place Topsoil	2,000	CY	$3.00	$6,000
29	Seeding, Fertilizing & Mulching	1	LS	$10,550.00	$10,550
				Subtotal	$6,846,325
				Contingencies (15%)	$1,027,675
				Total Estimated Construction Costs	**$7,874,000**
				ENGINEERING	**$1,677,200**
				LEGAL, ADMINISTRATION & TESTING (4%)	**$315,000**
				TOTAL ESTIMATED PROJECT COST	**$9,866,200**

EUAC for Treatment Alternative F 3.0% interest 20 term
MBBR

Description	Price	Salvage Value	Present Worth of Salvage Value	Net Present Worth
Mobilization	$508,000	$0	$0	$508,000
Clearing	$5,000	$0	$0	$5,000
Inlet Building Improvements	$250,000	$0	$0	$250,000
Lift Station	$160,000	$0	$0	$160,000
Rock Excavation	$2,000,000	$0	$0	$2,000,000
6" PVC Force Main	$23,100	$0	$0	$23,100
Air Release Manhole	$5,000	$0	$0	$5,000
8" PVC Outfall	$22,000	$0	$0	$22,000
Outfall Manholes	$10,000	$0	$0	$10,000
Headwall Structure	$5,000	$0	$0	$5,000
Gravel Surfacing	$4,500	$0	$0	$4,500
Convert Sludge Basins	$100,000	$0	$0	$100,000
12" PVC Gravity Sewer	$45,000	$27,000	$14,949	$30,051
12" Gate Valve & Box	$7,000	$4,200	$2,325	$4,675
12" Sanitary Bedding Material	$5,000	$0	$0	$5,000
Connect to Existing Force Main	$2,500	$0	$0	$2,500
Connect to Existing Outfall Line	$2,500	$0	$0	$2,500
Sanitary Manhole	$14,000	$8,400	$4,651	$9,349
Splitter Structure	$30,000	$18,000	$9,966	$20,034
MBBR Site Preparation	$150,000	$90,000	$49,831	$100,169
Moving Bed Bioreactor	$2,741,175	$1,644,705	$910,633	$1,830,542
SBR Building	$90,000	$0	$0	$90,000
Building Electrical and HVAC	$50,000	$0	$0	$50,000
UV Disinfection	$395,000	$237,000	$131,221	$263,779
SCADA System	$75,000	$45,000	$24,915	$50,085
MBBR Standby Generator Upgrade	$90,000	$54,000	$29,898	$60,102
Salvage & Place Topsoil	$6,000	$0	$0	$6,000
Seeding, Fertilizing & Mulching	$10,550	$0	$0	$10,550
Remaining Capital Costs	$3,019,875	$0	$0	$3,019,875
Total Construction Cost	**$9,826,200**	**$2,128,305**	**$1,178,391**	**$8,647,809**

Annual Operation and Maintenance Cost

Description	Annual Cost	Net Present Worth
Equipment	$4,000	$59,510
Supplies	$10,000	$148,775
Utilities	$100,000	$1,487,747
Additional Wastewater Sampling	$40,000	$595,099
Sludge Disposal	$29,000	$431,447
Labor (new employee half time)	$50,000	$743,874
Total Annual Cost	**$233,000**	**$3,466,452**
	Total Net Present Worth	**$12,114,261**
	EUAC	**$814,269**

Opinion of Probable Project Costs

The following table is used to compare the SAGR treatment option in conjunction with the four discharge location options. The SAGR is the recommended treatment alternative as the City currently has a Type II Operator and the SAGR system could continue to operation by a Type II operator certification. This table would look very similar if a SBR, or MBBR were to be selected for treatment instead of the SAGR, as the treatment costs would increase but the comparison between discharge locations would remain. This analysis assumes that future treatment would be required for the Beaver Creek discharge location as no current indication from SD DENR has identified a need for treatment improvements within the Beaver Creek watershed. An assumption is also made that the French Creek discharge location would have public approval of the socio-economic justification for a 1 mg/L ammonia nitrogen limit. As you can see, a future treatment cost is assumed for the Beaver Creek watershed and the lowest cost alternative is the French Creek location.

Table 13 - Opinion of Probable Project Cost Comparison

		French Creek	Flynn Creek	Beaver Creek- Sidney Park	Beaver Creek- Airport
Existing Plant Upgrades		$ 345,000	$ 345,000	$ 345,000	$ 345,000
Transfer Station, Effluent Lift Station and FM		$ 2,979,900	$ 7,304,300	$ 3,252,300	$ 5,551,500
SAGR (Design Flow 0.75 MGD)		$ 4,266,650	$ 4,266,650	$ -	$ -
Future Treatment				$ 5,734,021	$ 5,734,021
Demolition of Existing Structures & Equipment		$ 100,000	$ 100,000	$ 100,000	$ 100,000
Construction Subtotal		$ 7,691,550	$ 12,015,950	$ 9,431,321	$ 11,730,521
Contingencies, % of Const. Subtotal	20%	$ 1,539,000	$ 2,404,000	$ 1,887,000	$ 2,347,000
Total Construction 2019		$ 9,230,550	$ 14,419,950	$ 11,318,321	$ 14,077,521
Total Construction 2019, interest per year	3%	$ 9,425,000	$ 14,723,000	$ 11,557,000	$ 14,374,000
Design, Construction Admin, Observation, Legal	24%	$ 1,846,000	$ 2,884,000	$ 2,264,000	$ 2,816,000
Total Project Costs		**$ 11,271,000**	**$ 17,607,000**	**$ 13,821,000**	**$ 17,190,000**

EVALUATION OF OPERATION COSTS

Each discharge location has different pumping costs associated with it since there are different force main lengths and elevations to ascend. These costs are considered in the 20-year life cycle costs as a present worth of the future O&M costs.

Table 14 - Flynn Creek Discharge O&M

	HP	no.	Hrs/day		kWh/day
Aeration Blowers	20.0	2.00	24.00		720
SAGR Blowers	60.0	1.00	24.00		1080
Transfer Pumps	140.0	1.00	4.00		420
Lift Station Pumps	400.0	1.00	4.00		1200
			Total:	$	3,420
			Annual Cost:	$	99,864

Table 15 - Beaver Creek Discharge O&M

	HP	no.	Hrs/day		kWh/day
Aeration Blowers	20.0	2.00	24.00		720
Transfer Pumps	140.0	1.00	4.00		420
Lift Station Pumps	300.0	1.00	4.00		900
			Total:		1320
			Annual Cost:	$	38,544
SAGR Blowers	53.8	1.00	24.00		968
			Annual Cost:	$	28,277
			Total Annual Cost:	$	66,821

Table 16 - French Creek Discharge O&M

	HP	no.	Hrs/day	kWh/day
Aeration Blowers	20.0	2.00	24.00	720
SAGR Blowers	60.0	1.00	24.00	1080
Transfer Pumps	140.0	1.00	4.00	420
Lift Station Pumps	200.0	1.00	4.00	600
			total:	$ 2,820.00
			annual cost:	$ 82,344.00

EVALUATION OF MONETARY COSTS

A summary of the project costs for the recommended alternatives are shown in the 20-Year Cost of Ownership Comparison. Assumptions used in this analysis include 3.0% Inflation of construction costs and a useful life of 20 years. This table also assumes that future effluent limits would be imposed in the Beaver Creek watershed. It also assumes that a socio-economic analysis is approved for French Creek. The first 10 years of this comparison assumes that there would be no additional treatment operation cost for the Beaver Creek watershed.

Table 17 - 20-Year Cost of Ownership Comparison

City of Custer, South Dakota WWTF Improvements - 20 Year Cost of Ownership Comparison			
Alternative	**Construction Cost**	**Present Worth of O&M Costs**	**20 Year Cost of Ownership**
Flynn Creek	$ 17,607,000	$ 1,933,613	$ 19,541,000
Beaver Creek - Airport	$ 17,190,000	$ 1,102,583	$ 18,293,000
Beaver Creek - Sidney Park	$ 13,821,000	$ 1,102,583	$ 14,924,000
French Creek	$ 11,271,000	$ 1,568,780	$ 12,840,000

The French Creek alternative from Table 17 is a combination of Discharge Location Alternative 4-French Creek and Wastewater Treatment Alternative C – Submerged Attached Growth Reactor. Alternative 4 has the lowest construction cost and operation cost to discharge. This combination of alternatives has the lowest 20-Year Cost of Ownership. These alternatives will require a socio-economic analysis and public approval. The Alternative C treatment cost is for a level of treatment to meet 1 mg/L of ammonia nitrogen.

RECOMMENDED ALTERNATIVES

Wastewater Collection Alternative #2 – Continue to Repair System is recommended.

The City should continue to make repairs to the collection system as needs arise.

Discharge Location Alternative #4 – New Discharge Location-French Creek is recommended contingent upon the Socio-economic Analysis outcome. This discharge location is in closest proximity to the existing treatment facility and has the lowest 20-year cost.

Wastewater Treatment Alternative B – Existing Plant Upgrades is recommended. The existing HVAC system will be improved, as well as the controls. A new standby generator and automatic transfer switch would be installed.

Wastewater Treatment Alternative C – Submerged Attached Growth Reactor is recommended. This treatment alternative allows the City to meet more stringent effluent limits with the lowest construction and operation cost. It also allows the City to maintain the same level of operator certification.

Total Project Cost Summary

The total project costs for the recommended alternatives is $11,271,000. The following table shows a summation of alternatives.

Effluent Lift Station and Force Main - French Creek	$ 2,979,900
Existing Plant Upgrades	$ 345,000
Wastewater Treatment Alternative C - SAGR	$ 4,266,650
Demolition of Existing Structures and Equipment	$ 100,000
Construction Subtotal	**$ 7,691,550**
Contingency (20%)	$ 1,539,000
Construction Plus Contingency (Construction Year 2022)	$ 9,425,000
Design, Construction Admin, Observation, Legal	$ 1,846,000
Total Project Costs	**$ 11,271,000**

SHORT LIVED ASSET REPLACEMENT

It is a good financial practice for communities to plan for future operational and maintenance costs that are not considered capital improvement projects. Examples of these costs are treatment facility improvements, lift station pumps and cleaning and televising. Proposed short lived assets for the City of Custer are shown in the Short-Lived Assets Table.

Table 18 - Short Lived Assets

Expense Item	Replacement Period	Annual Amount Budgeted
Cleaning & Televising	3 Years	$5,000
Lift Station Pumps	15 Years	$10,000
Blower Replacement	15 Years	$10,000

CAPITAL FINANCING PLAN

The City has not yet considered increasing sewer rates to fund this project. The current sewer rate is based on water usage and broke into two categories: single family and commercial/multi-family. Thus, the current charge for 5,000 gallons is $30.12 for a single family and $48.16 for commercial/multi-family. There are currently 818 residential sewer users and 247 commercial users.

Payment for the proposed improvements will be by a combination of loan/grant monies and local funds. The City has not received any funding (grants, etc.) to date for these projects; however, any grants or principal forgiveness received would offset the amount of loans needed to fund this project. For estimating purposes, the following Capital Financing Plan Table shows repayment options that do not include any grant funds. The loan payment is based on a 20-year loan at 2.0% interest.

Table 19 - Capital Financing Plan

Revenue	$612,066.00
Expenses	$587,251.00
Capital Expenditures	$402,239.00
Current Debt Payment	$62,766.00
Short Lived Asset Replacement	$25,000.00
Net Cash From Operations	**-$62,951.00**
New Loan Payment	$689,297.37
Debt Reserves (10%)	$68,929.74
Net Fund Balance	**-$821,178.11**
Monthly Rate Increase	$65.00
Number of Customers	1,065
Annual Revenue Generated	$830,700.00
Fund Balance After Increase	**$9,521.89**

ENVIRONMENTAL EVALUATION

If the City applies for funding to complete any of the recommended alternatives, then the funding agencies will require an environmental review. The following agencies will be contacted as part of the review process.

Historical and Archaeological Sites

There are no historical or archeological sites that are known to presently exist within the area which is to be affected by this project. However, the discharge location to French Creek may include an area that has not been previously disturbed. The State Historical Preservation Office will be contacted to provide their comments on the proposed improvements. Any comments that are received will be placed in Appendix B.

Floodplains and Wetlands

The floodplain elevations appear to be just below elevations on the treatment plant site. The U.S. Army Corps of Engineers will be contacted to provide their comments on the proposed improvements. Any comments that are received will be placed in Appendix B.

There are no existing major wetlands contained within the project area according to the National Wetlands Inventory Map found online at http://wetlands.fws.gov/. A copy of the map is shown in Appendix C. Any comments that are received will be placed in Appendix B.

Agricultural Lands

There are no improvements that will have a negative impact on prime farmland. The U.S. Department of Agriculture will be contacted to provide their comments on the proposed improvements. Any comments that are received will be placed in Appendix B.

Wild and Scenic Rivers

Comments regarding wild and scenic rivers will be placed in Appendix B.

Fish and Wildlife Protection

The U.S. Fish and Wildlife Service and the South Dakota Game Fish and Parks will be contacted to provide their comments on the proposed improvements. Any comments that are received will be placed in Appendix B.

Water Quality and Quantity

Protecting water quality and quantity will be a consideration that is included in the design of the proposed improvements. The South Dakota Department of Environment and Natural Resources will be contacted to provide their comments on the proposed improvements. Any comments that are received will be placed in Appendix B.

Miscellaneous Issues

Items considered under this category include air quality, noise, and solid waste management. No long-term impacts to the existing conditions of air quality, noise, and solid waste management are expected to result from this project.

VIEWS OF THE PUBLIC AND CONCERNED INTEREST GROUPS

The responses from various review agencies will be included in a final document. Minutes from the public hearing will be provided to the funding agencies once the hearing is completed.

SELECTED PLAN, DESCRIPTION AND IMPLEMENTATION ARRANGEMENT

JUSTIFICATION AND DESCRIPTION OF SELECTED PLAN

A no action alternative delays making the inevitable improvements for the community until conditions worsen to a point where the City has to act immediately due to some unforeseen circumstance. The City is currently accruing annual costs in force main repairs. Project costs go up with time and waiting to do these improvements will only increase the cost of the projects due to inflation. It is recommended that the selected alternatives described in this facilities plan be adopted by the City.

DESIGN OF SELECTED PLAN

The descriptions describe the proposed projects. Some preliminary lay outs were planned for estimating purposes. Further analysis and design will be performed for the project during the final design phase of the project and prior to construction of the project. The plans will be designed and submitted to the appropriate funding agencies for review.

OPINION OF PROBABLE COST FOR THE SELECTED PLAN

Detailed project opinions of probable cost for each alternative are provided in the Development of Wastewater Alternatives section and in the memo provided by KLJ in Appendix A.

ENVIRONMENTAL IMPACTS OF SELECTED PLAN

The impact of these projects on the environment will be minimized during construction by a variety of methods. The utility trenches will be brought back to existing grade and shaped to the proposed cross sections. The disturbed areas will be seeded or re-paved to prevent erosion. Other erosion control features such as storm water inlet protection, silt fences, vehicle tracking stations, etc. will be utilized in all construction areas.

Other environmental impacts relating to this type of construction project include air quality, noise and solid waste management. This project will not include any long-term air emissions. Short term effects on air quality arise from emissions from the construction equipment and the potential

for dust. Construction equipment must meet OSHA, State and Federal law regarding air and noise emissions. Dust will be controlled during the project with the use of watering trucks. Solid waste materials emanating from this construction site will be disposed of at an approved sanitary landfill.

ARRANGEMENTS FOR IMPLEMENTATION

Operation and Maintenance Requirements

The existing treatment plant and force main will need to remain in operation during construction of any proposed improvements. A force main installation to French Creek would allow for the existing force main to Flynn Creek to stay in operation during construction. A force main installation to Flynn Creek would add additional easement acquisition or construction pumping costs to install the force main in the location of the existing force main.

LAND ACQUISITIONS

Land or temporary construction easement may be required for the proposed project improvements.

IMPLEMENTATION SCHEDULE

Project Schedule

Socio-Economic Analysis	Spring 2020
Public Hearing	Spring 2020
Treatment Process Selection	Summer 2020
Phasing Considerations	Summer 2020
Funding Applications – Grant vs. Loan	Fall 2020

REFERENCES

South Dakota Department of Environment and Natural Resources, (July 1979). Criteria for Design of Public Water Supply Facilities in South Dakota, Albany, New York

South Dakota Department of Environment and Natural Resources, (March 1991). Recommended Design Criteria Manual Wastewater Collection and Treatment Facilities, Pierre, SD: Division of Environmental Services

South Dakota Department of Environment and Natural Resources, (October 1998). Antidegradation Implementation Procedures

Appendix A

KLJ Technical Memorandums

330 Knollwood Drive
Rapid City, SD 57701-6611
605 721 5553
KLJENG.COM

Technical Memorandum

Date: 11/7/2019
To: Bob Morrison
Copy to: Trent Bruce - DGR
From: Dana Foreman, PE; Jess Wagner, PE
RE: WWTP Discharge Options Custer, South Dakota

BACKGROUND

As part of the wastewater treatment plant (WWTP) study, this technical memorandum (TM) discusses and analyzes the force main portions of the five potential wastewater discharge locations.

Currently, the City of Custer wastewater treatment plant transfers treated wastewater to a designated discharge outfall along Flynn Creek through an existing 12-inch force main. The current design pumping rate from the WWTP to Flynn Creek is 1,000 gpm. The WWTP Study has determine a design peak hour pumping rate of the new WWTP to be 2.625 GPD (1,825 gpm).

The existing wastewater treatment process includes drawing water from the aeration basins and pumping the water to the storage ponds north of the WWTP via an 8-inch force main. The current 8-inch force main from the aerated ponds to the storage ponds is a combination of Class 200 PVC in the lower potion and Asbestos Cement (AC) pipe for the remaining portion.

Water from the storage ponds then flows via gravity back to the WWTP where it is then pumped through a 12-inch force main to the discharge outfall on Flynn Creek. The change in elevation between the WWTP and the discharge point along Flynn Creek is approximately 315 feet.

The existing 12-inch force main discharge pipe from the WWTP building to Flynn Creek is a combination of RTRP Class 250 and Class 200 PVC approximately 8 miles in length. A schematic of the transfer and discharge pump stations is shown in Figure 1 below. The City of Custer has experienced multiple pipe failures along the 12-inch RTRP and 8-inch asbestos cement portions and are needing replaced.

Figure 1 – WWPT Pump Station Schematic

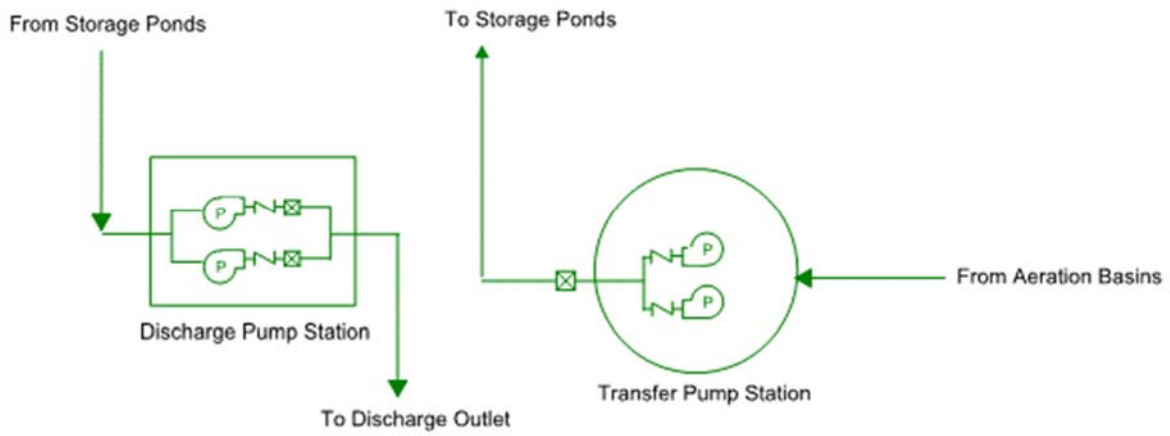

A total of 5 options for discharging treated effluent from the WWTP were assessed and discussed in this TM. The options included:

Option 1: No Action

Option 2: Flynn Creek (current discharge location)

Option 3: French Creek (downstream of Stockade Lake)

Option 4: Beaver Creek (Sydney Park Basin Outlet)

Option 5: Beaver Creek (Airport/HWY385)

A map showing the route of the proposed options is shown in Figure attached.

This TM will include a discussion of each alternative and preliminary opinion of probable construction cost. Options presented in the TM is a high-level assessment and general assumptions were made for the basis of the analysis. As-builts of the existing WWTP, storage ponds and force main were used when available. The proposed new routes for Options 3-5 were based on following major arterials. The routes may be subject to change once an option is selected based on existing easements, underground utilities, land ownership, etc. The options discussed below, and opinion of probable construction cost do not take into consideration any of the cost associated with increasing pond storage capacity to meet the 180 days of available storage for the increase flows.

The proposed outfall location, except for Option 2, are all conceptual and an actual permitted outfall location would need to determine by working with the state agencies.

Analysis of Options

Option 1: No Action

The existing force main was constructed in 1985. The force main was installed using 2 different piping materials, a RTRP class 250 pressure pipe and class 200 PVC pressure pipe. For the past several years the City has made repairs to the force main due to breaks in the pipe. The proposed pump design flow

is almost double the current pump flow. With the increased flows the current force main would not be able to transfer the flows from the WWTP to the discharge outfall. If the City wishes to increase the flows no action is not a viable option.

Option 2: Flynn Creek Outlet (Current Discharge Location)

This option would follow the existing route with a few minor changes in the route. The existing route has a change in elevation of approximately 315 feet and the force main length is approximately 8 miles. The current force main would not have the ability to handle the increased pressures that will result from the increased flowrate and would need to be replaced. Four alternatives have been identified with this option. They include:

- Option 2A: Maintaining the existing flowrate.
- Option 2B: Increasing flowrate to proposed design flowrate.
- Option 2C: Increasing flowrate and abandon storage ponds
- Option 2D: Increase flowrate and add a second lift station.

Option 2A

This option would assume the existing flowrate of 1,000 gpm would not change. To make this option feasible, confirmation is needed that the storage ponds will have the capacity to store the excess water that is being treated until the pumps can transfer the water to the discharge outlet. If adequate storage is not available, additional cells would need to be constructed beyond the 180-days of storage at the new proposed design flows.

This option would include replacement of approximately 2.5 miles of 12-inch force main. This portion of the force main is 12-inch RTRP Class 250 Pressure Pipe. The remaining 12-inch PVC force main to the discharge outlet will remain.

Other improvements would include replacement of the existing vertical turbine pumps transferring water from the storage ponds to the discharge outlet, including all the piping, fittings, valves, controls and adding a flow meter. The pumps will include VFD's.

This would also require the pumps to operate more frequently not just during the spring/summer months to keep from needing to add some, if any, additional storage capacity to the ponds beyond the 180-day of required storage. This is likely not a viable option as it will create a bottleneck in the system.

Option 2B

The pumps would be sized for the proposed design flowrate. To accommodate the increased flowrate the existing force main would be replaced with a larger diameter force main to the discharge outlet. The force main from the transfer pump station to the storage ponds would also be replaced with a larger diameter pipe.

The proposed improvements to the pumping stations would include replacement to the current transfer pump station that conveys water from the aeration ponds to the storage ponds. Improvements would include the replacement of the pumps, valves, controls, piping and adding a valve vault.

The discharge pump station improvements would include replacing with current discharge pumps, piping, valves, controls and the addition of a flow meter. The pumps will be installed with VFDs.

Option 2C:

This option would include the abandonment of the transfer pump station to the ponds, force main to and from the pond and the existing storage ponds. The discharge pumps would be sized for the proposed design flowrate. To accommodate the increased flowrate the existing force main would be replaced with a larger diameter pipe.

Other improvements will include replacement the discharge pumps, piping, valves, controls and the addition of a flow meter. The pumps will be installed with VFDs.

Option 2D

The pumps would be sized for the proposed design flowrate. A second discharge pumping station would be added to allow for the installation of a new force main equivalent in size to the existing. The second pumping station would be located approximately at the intersection of Sidney Park Road and Flynn Creek Road. The existing force main downstream of the 2nd pumping station would remain. The force main from the transfer pump station to the ponds will be replaced with a larger diameter pipe.

The proposed improvements to the pumping stations would include replacement to the current transfer pump station the conveys water from the aeration ponds to the storage ponds. Improvements would include the replacement of the pumps, valves, controls, piping and adding a valve vault.

The discharge pump station improvements would include replacing with current discharge pumps, piping, valves, controls and the addition of a flow meter. The pumps will be installed with VFDs.

Option 3: French Creek (downstream of Stockade Lake)

This option would reroute the force main to discharge into French Creek downstream of Stockade Lake. The preliminary proposed route is shown in Figure 2. The proposed route will have minimal change in elevation. The force main length would be approximately 3 miles. Two (2) alternatives have been identified with this option. They include:

- Option 3A: Increasing flowrate to proposed design flowrate.
- Option 3B: Increasing flowrate to proposed design flowrate and abandon storage ponds.

Option 3A

The pumps would be sized for the proposed design flowrate. A new force main will be installed from the discharge pump station to the discharge outlet. The force main from the transfer pump station to the ponds will be replaced with a larger diameter pipe.

The proposed improvements to the pumping stations would include replacement to the current transfer pump station that conveys water from the aeration ponds to the storage ponds. The improvements would include the replacement of the pumps, valves, controls, piping and adding a valve vault.

The discharge pump station improvements would include replacement of the discharge pumps, piping, valves, controls and the addition of a flow meter. The pumps will be installed with VFDs.

Option 3B:

This option would include the abandonment of the transfer pump station to the ponds, force main to and from the pond and the existing storage ponds. The pumps would be sized for the proposed design flowrate. A new force main will be installed from the discharge pump station to the discharge outlet.

The discharge pump station improvements would include replacement of the discharge pumps, piping, valves, controls and the addition of a flow meter. The pumps will be installed with VFDs.

Option 4: Beaver Creek (Sydney Park Basin Outlet)

This option would reroute a portion of the force main to allow for discharge into the Beaver Creek basin outlet by Sydney Park. The preliminary proposed route is shown in figure attached. The proposed route will have a change in elevation from the storage ponds to the discharge outlet is approximately 185 feet. The force main length would be approximately 5 miles from the WWTP to the outlet. Two (2) alternatives have been identified with this option. They include:

- Option 4A: Increasing flowrate to proposed design flowrate.
- Option 4B: Increasing flowrate to proposed design flowrate and abandon storage ponds.

Option 4A

The pumps would be sized for the proposed design flowrate. A new pipe will be installed along 2.5 miles of the existing force main from the discharge pump station. The force main from the transfer pump station to the ponds would also be replaced with a larger diameter pipe.

This option would include replacement of approximately 2.5 miles of RTRP Class 250 12-inch force main with the same diameter pipe. The remaining 12-inch force main will remain along the existing route to approximately the intersection of Sidney Park Rd and Flynn Creek Road. A new force main being installed from the intersection to the new discharge outlet.

The proposed improvements to the transfer pump station would include replacement of the pumps, valves, controls, piping and adding a valve vault.

The discharge pump station improvements would include replacement of pumps, piping, valves, controls and the addition of a flow meter. The pumps will be installed with VFDs.

Option 4B:

This option would include the abandonment of the transfer pump station to the ponds, force main to and from the pond and the existing storage ponds. The pumps would be sized for the proposed design flowrate. A new larger diameter pipe will be installed along 2.5 miles of the existing force main from the discharge pump station.

This option would include replacement of approximately 2.5 miles of RTRP Class 250 12-inch force main with a larger diameter pipe. The remaining 12-inch force main will remain along the existing route to approximately the intersection of Sidney Park Rd and Flynn Creek Road. A new force main being installed from the intersection to the new discharge outlet.

Other improvements will include replacement of pumps, piping, valves, controls and the addition of a flow meter. The pumps will be installed with VFDs.

Option 5: Beaver Creek (Airport/HWY385)

This option would reroute a portion of the force main to allow for discharge into the Beaver Creek basin outlet by the Airport. The preliminary proposed route is shown in Figure 2. With this proposed route the change in elevation from the WWTP to the outlet is approximately 185 feet. The force main length would be approximately 5 miles from the WWTP to the outlet. Two (2) alternatives have been identified with this option. They include:

- Option 5A: Increasing flowrate to proposed design flowrate.
- Option 5B: Increasing flowrate to proposed design flowrate and abandon storage ponds.

Option 5A

The pumps would be sized for the proposed design flowrate. A new pipe with the same diameter will be installed from the discharge pump station to the discharge outlet. The force main from the transfer pump station to the ponds would also be replaced with a larger diameter pipe.

The proposed improvements to the transfer pump station would include replacement of the pumps, valves, controls, piping and adding a valve vault.

The discharge pump station improvements would include replacement of pumps, piping, valves, controls and the addition of a flow meter. The pumps will be installed with VFDs.

Option 5B:

This option would include the abandonment of the transfer pump station to the ponds, force main to and from the pond and the existing storage ponds. The pumps would be sized for the proposed design flowrate. To accommodate the increased flowrate the existing force main would need to be replaced with a larger diameter pipe.

Other improvements will include replacement the discharge pumps along with the pumps, piping, valves, controls and the addition of a flow meter. The pumps will be installed with VFDs.

Opinion of Probable Cost

The opinion of probable cost for each option discussed in the previous section are presented below. In developing the cost shown in the tables below a few assumptions were made they include:

- All existing force main that was installed adjacent to the gravity sewer will need to be replaced by means of pipe bursting or directional boring.
- Replacement of existing force main not installed adjacent to the gravity sanitary sewer was estimated to be a combination of open cut, directional boring and some pipe bursting.
- No cost was included for acquiring easements either temporary or permanent.
- All force main of different sizes was assumed to be either DR14 or DR18 PVC.

The opinion of probable construction cost presented below are based on a preliminary design and will be refined during design. All cost presented below are in today's dollar.

Option 1: No Action

Option 1: This option would require no action and there is no construction cost associated with this option. The City will continue to repair the force main and pumping stations as necessary.

Option 2: Flynn Creek (current discharge location)

Option 2A: maintaining the existing flowrate. The opinion of probable project cost is shown in Table 1 below.

Table 1 – Option 2A Opinion of Probable Construction Cost

Description	Opinion of Probable Construction Cost	
Mobilization	$	245,900.00
Transfer Pump Station Improvements	$	390,300.00
Transfer Force Main Improvements	$	250,600.00
Discharge Pump Improvements	$	560,800.00
Effluent Force Main Improvements	$	2,180,000.00
Site Work	$	130,000.00
Total Construction Cost	$	3,757,600.00
Legal, Admin, Engineering and Construction (20%)	$	751,600.00
Contingencies (20%)	$	751,600.00
Opinion of Probable Construction Cost	$	5,260,800.00

Option 2B: increasing flowrate to proposed design flowrate. The opinion of probable project cost is shown in Table 2 below.

Table 2 – Option 2B Opinion of Probable Construction Cost

Description	Opinion of Probable Construction Cost	
Mobilization	$	477,900.00
Transfer Pump Station Improvements	$	390,300.00
Transfer Force Main Improvements	$	250,600.00
Discharge Pump Improvements	$	748,100.00
Effluent Force Main Improvements	$	5,157,320.00
Site Work	$	280,000.00
Total Construction Cost	$	7,304,300.00
Legal, Admin, Engineering and Construction (20%)	$	1,460,900.00
Contingencies (20%)	$	1,460,900.00
Opinion of Probable Construction Cost	$	10,226,100.00

Option 2C: increasing flowrate to proposed design flowrate and abandon storage ponds. The opinion of probable project cost is shown in Table 3 below.

Table 3 – Option 2C Opinion of Probable Construction Cost

Description	Opinion of Probable Construction Cost	
Mobilization	$	460,600.00
Discharge Pump Improvements	$	777,000.00
Effluent Force Main Improvements	$	5,541,850.00
Site Work	$	260,000.00
Total Construction Cost	$	7,039,500.00
Legal, Admin, Engineering and Construction (20%)	$	1,407,900.00
Contingencies (20%)	$	1,407,900.00
Opinion of Probable Construction Cost	$	9,855,300.00

Option 2D: Increase flowrate and add a second lift station. The opinion of probable project cost is shown in Table 4 below.

Table 4 – Option 2D Opinion of Probable Construction Cost

Description	Opinion of Probable Construction Cost	
Mobilization	$	353,600.00
Transfer Pump Station Improvements	$	390,300.00
Transfer Force Main Improvements	$	250,600.00
Discharge Pump Station No. 1 Improvements	$	689,800.00
Discharge Pump Station No. 2 Improvements	$	1,760,000.00
Effluent Force Main Improvements	$	1,960,650.00
Site Work	$	130,000.00
Total Construction Cost	$	5,535,000.00
Legal, Admin, Engineering and Construction (20%)	$	1,107,000.00
Contingencies (20%)	$	1,107,000.00
Opinion of Probable Construction Cost	$	7,749,000.00

Option 3: French Creek (downstream of Stockade Lake)

Option 3A: increasing flowrate to proposed design flowrate. The opinion of probable project cost is shown in Table 5 below.

Table 5 – Option 3A Opinion of Probable Construction Cost

Description	Opinion of Probable Construction Cost	
Mobilization	$	195,000.00
Transfer Pump Station Improvements	$	390,300.00
Transfer Force Main Improvements	$	250,600.00
Discharge Pump Improvements	$	466,900.00
Effluent Force Main Improvements	$	1,502,100.00
Site Work	$	175,000.00
Total Construction Cost	$	2,979,900.00
Legal, Admin, Engineering and Construction (20%)	$	596,000.00
Contingencies (20%)	$	596,000.00
Opinion of Probable Construction Cost	$	4,171,900.00

Option 3B: increasing flowrate to proposed design flowrate and abandon storage ponds. The opinion of probable project cost is shown in Table 6 below.

Table 6 – Option 3B Opinion of Probable Construction Cost

Description	Opinion of Probable Construction Cost	
Mobilization	$	143,100.00
Discharge Pump Station Improvements	$	558,000.00
Effluent Force Main Improvements	$	1,330,300.00
Site Work	$	155,000.00
Total Construction Cost	$	2,186,400.00
Legal, Admin, Engineering and Construction (20%)	$	437,300.00
Contingencies (20%)	$	408,700.00
Opinion of Probable Construction Cost	$	3,032,400.00

Option 4: Beaver Creek (Sydney Park Basin Outlet)

Option 4A: increasing flowrate to proposed design flowrate. The opinion of probable project cost is shown in Table 7 below.

Table 7 – Option 4A Opinion of Probable Construction Cost

Description	Opinion of Probable Construction Cost	
Mobilization	$	212,800.00
Transfer Pump Station Improvements	$	390,300.00
Transfer Force Main Improvements	$	250,600.00
Discharge Pump Improvements	$	698,000.00
Effluent Force Main Improvements	$	1,520,600.00
Site Work	$	180,000.00
Total Construction Cost	$	3,252,300.00
Legal, Admin, Engineering and Construction (20%)	$	650,500.00
Contingencies (20%)	$	650,500.00
Opinion of Probable Construction Cost	$	4,553,300.00

Option 4B: increasing flowrate to proposed design flowrate and abandon storage ponds. The opinion of probable project cost is shown in Table 8 below.

Table 8 – Option 4B Opinion of Probable Construction Cost

Description	Opinion of Probable Construction Cost	
Mobilization	$	179,200.00
Discharge Pump Improvements	$	705,000.00
Effluent Force Main Improvements	$	1,674,800.00
Site Work	$	180,000.00
Total Construction Cost	$	2,739,000.00
Legal, Admin, Engineering and Construction (20%)	$	547,800.00
Contingencies (20%)	$	547,800.00
Opinion of Probable Construction Cost	$	3,834,600.00

Option 5: Beaver Creek (Airport/HWY385)

Option 5A: increasing flowrate to proposed design flowrate. The opinion of probable project cost is shown in Table 9.

Table 9 – Option 5A Opinion of Probable Construction Cost

Description	Opinion of Probable Construction Cost
Mobilization	$ 363,200.00
Transfer Pump Station Improvements	$ 390,300.00
Transfer Force Main Improvements	$ 250,600.00
Discharge Pump Improvements	$ 689,800.00
Effluent Force Main Improvements	$ 3,677,600.00
Site Work	$ 180,000.00
Total Construction Cost	$ 5,551,500.00
Legal, Admin, Engineering and Construction (20%)	$ 1,110,300.00
Contingencies (20%)	$ 1,110,300.00
Opinion of Probable Construction Cost	$ 7,772,100.00

Option 5B: increasing flowrate to proposed design flowrate and abandon storage ponds. The opinion of probable project cost is shown in Table 10.

Table 10 – Option 5B Opinion of Probable Construction Cost

Description	Opinion of Probable Construction Cost
Mobilization	$ 316,600.00
Discharge Pump Improvements	$ 705,000.00
Effluent Force Main Improvements	$ 3,636,800.00
Site Work	$ 180,000.00
Total Construction Cost	$ 4,838,400.00
Legal, Admin, Engineering and Construction (20%)	$ 967,700.00
Contingencies (20%)	$ 967,700.00
Opinion of Probable Construction Cost	$ 6,773,800.00

CONSTRUCTION CONSIDERATIONS

All the options discussed in this TM have construction concerns. The existing force main from the WWTP to approximately Canal St and Bluebell Lane was installed in the same trench at approximately the same elevation as the gravity sanitary sewer. The separation between the two is 12 inches according to existing plans. The separation between the two pipes may make it difficult to replace the existing force main by open cutting without the potential of causing damage to the existing gravity sanitary sewer. Alternative options to open cutting would include pipe bursting or creating a larger separation distance between the 2 pipes by moving the force main. If the force main can be moved, then the option of open cutting or directional boring could be considered viable options.

All options presented above will require identifying or obtaining easements for the installation of the new force main.

CONCLUSION

This TM discussed a total of 5 options for discharging treated effluent from the WWTP. The options and their alternatives are shown on Table 11 below. The table also provides the Opinion of Probable Construction cost.

Table 11 - Option Summary and Opinion of Probable Cost

Option	Description	Opinion of Probable Construction Cost
Option 1: No Action		
1	Do Nothing	N/A
Option 2: Flynn Creek (current discharge location)		
2A	Maintaining the existing flowrate.	$ 5,260,800.00
2B	Increasing flowrate to proposed design flowrate.	$ 10,226,100.00
2C	Increasing flowrate and abandon storage ponds	$ 9,855,300.00
2D	Increase flowrate and add a second lift station.	$ 7,749,000.00
Option 3: French Creek (downstream of Stockade Lake)		
3A	Increasing flowrate to proposed design flowrate.	$ 4,171,900.00
3B	Increasing flowrate and abandon storage ponds	$ 3,032,400.00
Option 4: Beaver Creek (Sydney Park Basin Outlet)		
4A	Increasing flowrate to proposed design flowrate.	$ 4,553,300.00
4B	Increasing flowrate and abandon storage ponds	$ 3,834,600.00
Option 5: Beaver Creek (Airport/HWY385)		
5A	Increasing flowrate to proposed design flowrate.	$ 7,772,100.00
5B	Increasing flowrate and abandon storage ponds	$ 6,773,800.00

As discussed in previous sections Option 1 is not a viable option as the existing pumps and force main would not be able to handle the increased flows. Option 2A is likely not a viable option as this would create a bottleneck in the system and may require additional storage compared to some of the other options.

Options 3-5 are all conceptual and a permit to discharge to the proposed receiving waters has not been approved. To determine if options 3-5 are viable options a discussion with the governing agencies would need to occur. Depending on the beneficial uses of each receiving waters additional treatment may be required at the WWTP. These factors were not considered as part of this TM.

Additional capacity may be required for all the options that would continue to utilize the existing storage ponds. Determination of current available storage capacity and required storage capacity for the future design flows were not completed as part of this TM.

RECOMMENDATIONS

A recommendation on which option and alternative is the best selection for the force main route cannot be provided in this TM. To provide a recommendation, the following items need to be completed:

- Discussion with permitting agencies regarding the proposed outfall locations presented in this TM.
- Analysis of current capacity of the storage ponds. Determination of additional storage capacity needs.
- Options for improvements to the WWTP to allow discharge to the receiving waters discussed in each option and alternatives.
- Determination of feasibility of proposed force main routes in obtaining easements both temporary and permanent.

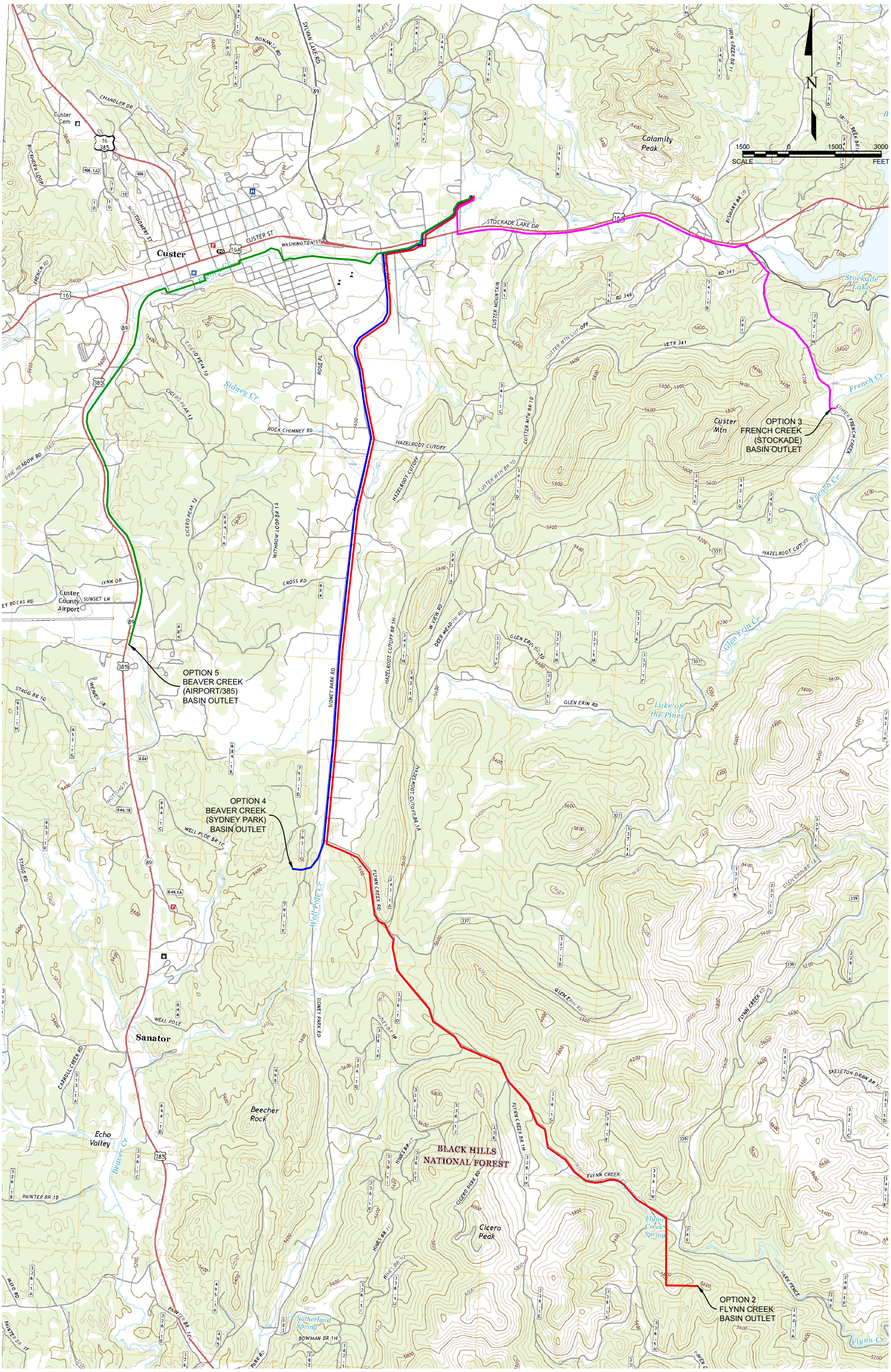

KLJ

PRELIMINARY - NOT FOR CONSTRUCTION

Nov 07, 2019 - 5:58pm - P:\City\SD\CusterCity\10416101-WWTP\CAD\Work\Report\10416101_Exhibit1.dwg (klj11x17Port)

© KLJ 2019

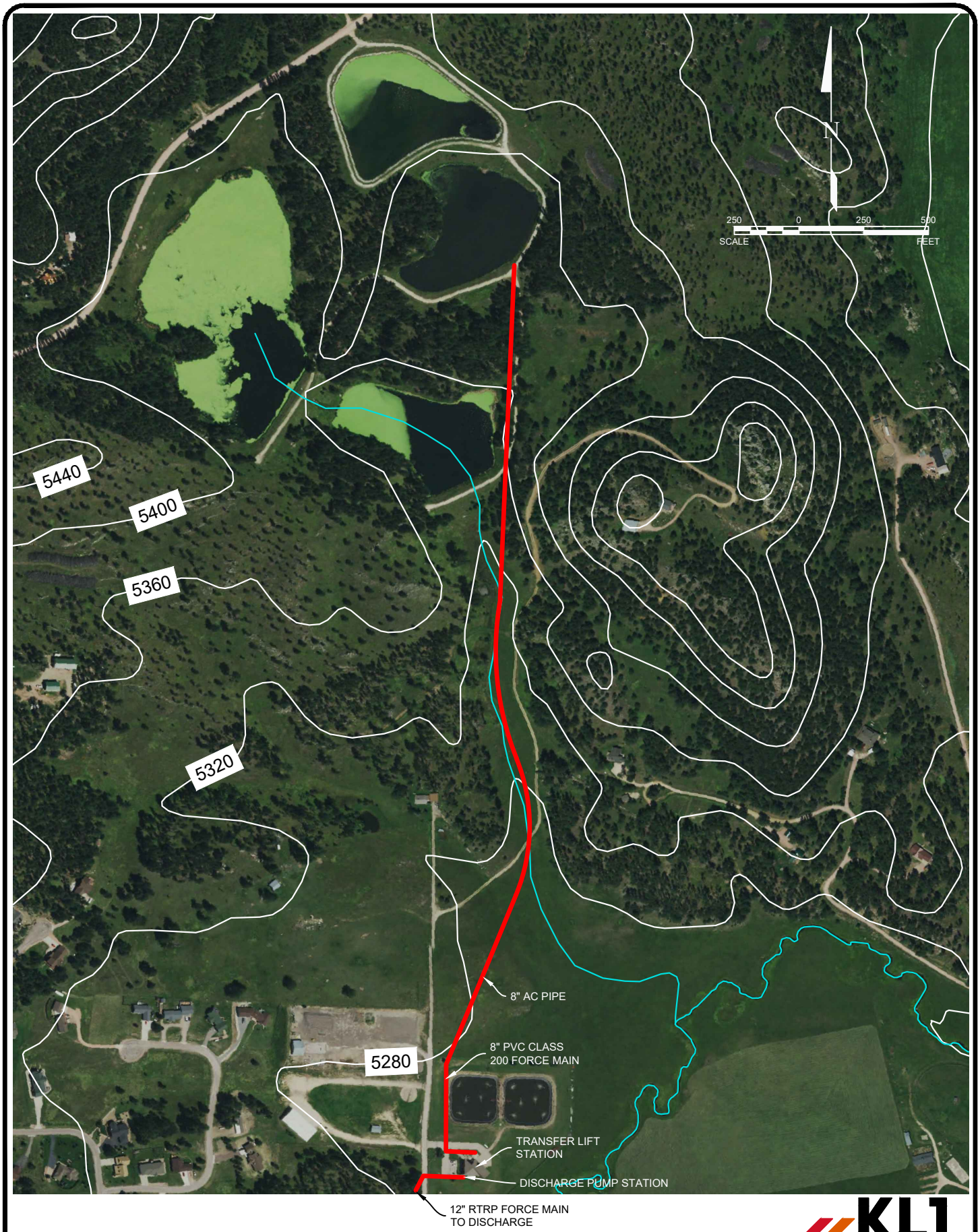

KLJ

PRELIMINARY - NOT FOR CONSTRUCTION

Oct 14, 2019 - 1:49pm - P:\City\SD\CusterCity\10416101-WWTP\CAD\Work\Report\10416101_Exhibit2.dwg (klj8.5x11Port)

© KLJ 2019

Appendix B

Agency Response Letters

Environmental Review letters will be requested after a socio-economic analysis and public hearing

Appendix C

2011 Sanitary Sewer Assessment I&I Study

RECEIVED

[redacted]

SANITARY SEWER ASSESSMENT

INFLOW & INFILTRATION STUDY

Custer, South Dakota

PREPARED FOR:

CITY OF CUSTER

CUSTER, SD

Revised:

October 20, 2011

REGISTERED PROFESSIONAL ENGINEER
REG. NO.
10130
SARA
ODDEN
SOUTH DAKOTA
10/20/2011

Kadrmas
Lee &
Jackson

Engineers Surveyors
Planners

Contents

I. BACKGROUND INFORMATION 1

A. General Information 1

B. Population Characteristics and Projections 1

C. Topography/Climate 2

D. Environmental Review Information 3

E. Public Interest 3

II. EXISTING CONDITIONS 3

A. Wastewater Treatment Plant and Collection System 3

B. Project Need and Planning Area Identification 6

C. Sanitary Sewer Assessment 7

1. Condition Valuation Program 8
2. Manhole and Sewer Line Inspections 8
3. Flow Monitoring 9
4. Closed-Circuit Television (CCTV) 12

D. Wastewater Flow 13

E. Inflow and Infiltration (I/I) 14

F. Effluent Discharge 18

III. ALTERNATIVES 21

A. Alternative 1: Treatment (No Action) 21

B. Alternative 2: Trenchless Rehabilitation Methods 21

1. Cured In-Place Pipe (CIPP) 22
2. Slip Lining 23
3. Pipe Bursting 23

C. Alternative 3: Traditional Rehabilitation Methods 24

D. Recommended Rehabilitation Areas 24

E. Estimate of Probable Cost 26

III. RECOMMENDATIONS AND SUMMARY 27

Figures

Figure 1 Flow Meter Locations 10

Tables

Table 1 Custer City Population Projections 2
Table 2 Utility Rate Summary in Dollars (2011) 5
Table 3 Utility Rate Summary in Dollars (2012) 5
Table 4 Flow Meter Data 11
Table 5 Condition Assessment Criteria 12
Table 6 Average Monthly Water Usage for 2010 13
Table 7 Average Monthly Sanitary Influent for 2010 15
Table 8 Allowable Infiltration 16
Table 9 Monthly Water Usage + Allowable Infiltration vs. Monthly Sanitary Influent 17
Table 10 Maximum Effluent Limits 18
Table 11 Hydraulic Loading on Stabilization Ponds 20
Table 12 Average Effluent Test Results from Outfall 001 20
Table 13 Estimate of Probable Cost Summary 27

List of Appendices

Appendix A ..... Regulatory Agency Comment Letters
Appendix B ..... Wastewater Treatment Plant Location Map
Appendix C ..... Sanitary Sewer Location Map
Appendix D ..... City of Custer Ordinances
- 13.12 Sewer Service System Generally
- 13.16 Sewer System Use Regulations
- 13.20 Sewer Service Charges
- 13.24 Water and Sewer Rate Classifications
- Ordinance No. 697
- Ordinance No. 698

Appendix E ..... Sample Reports from CCTV Inspection
Appendix F ..... Summary of Defects Identified During CCTV Inspection
Appendix G ..... Sanitary Sewer Condition Map
Appendix H ..... Raw Water Characteristics
- Influent Weather Logs
- Influent Flow Summaries
- Effluent Discharge and Lab Result Logs for Outfall 001

Appendix I ..... Priority Area Map
Appendix J ..... Estimates of Probable Cost
Appendix K ..... Rate Analyses
- Sewer Rate Analysis
- Rate Increase Analysis

I. BACKGROUND INFORMATION

A. General Information

The City of Custer was founded on August 10, 1875 and is located in north central Custer County, South Dakota. According to the United States Census Bureau, the City has a total area of 1.8 square miles; all of it is land (no water).

Custer County is located in southwestern South Dakota. The 2010 census recorded a population of 8,216 persons residing in Custer County. The population increased 12.9% from the 2000 census (7,275 persons) to the 2010 census. According to the U.S. Census Bureau, the county has a total area of 1,559 square miles, of which 1,558 square miles are land and 1 square mile is water. Tourist attractions such as Wind Cave National Park, Jewel Cave National Monument, and Custer State Park are also located in the county.

The City of Custer is governed by an Aldermanic form of government. The city is divided into three wards, with two council persons elected from the residents within each ward. The mayor is elected at large by all city residents. The City Council and mayor have the responsibility of determining city policies.

B. Population Characteristics and Projections

The 2010 census recorded the population of the City of Custer as 2,067 persons. The median age of a Custer resident is 47.5 years. The most recent census data indicates that the City's median household income is $35,290, which is $9,753 below the South Dakota median household income of $45,043.

The permanent population in Custer, SD experienced an annual growth rate of about 1.11 percent per year between the 2000 (1,860 persons) and the 2010 (2,067 persons) censuses. This annual growth rate was determined by calculating the straight line growth rate between the 2010 census population and the 2000 census population [(2,067-1,860)/1,860=11.1%]. The straight line growth rate was then averaged over the 10 year time period [11.1%/10 years= 1.11% per year]. Assuming this growth rate continues, Custer will have a population of approximately 2,578 by the year 2030. The future population was estimated utilizing the annual growth rate over the time period of 20 years (the projected population design period as defined

in Section I.C.2 of the Recommended Design Criteria Manual for Wastewater Collection and Treatment Facilities by SD DENR) and the straight line growth rate method. See Table 1 below for population projections from 2010 to 2030.

Table 1
Custer City Population Projections

Year	Population	Year	Population	Year	Population
2010	2,067	2017	2,233	2024	2,412
2011	2,090	2018	2,258	2025	2,439
2012	2,113	2019	2,283	2026	2,466
2013	2,137	2020	2,308	2027	2,494
2014	2,160	2021	2,334	2028	2,521
2015	2,184	2022	2,360	2029	2,549
2016	2,209	2023	2,386	2030	2,578

As shown in the table above, the population of Custer is expected to continue to grow in the following years. This growing population will place added loads on the Wastewater Treatment Plant (WWTP).

C. Topography/Climate

The City of Custer lies within the southern Black Hills. The Black Hills are an extension of the Rocky Mountains that occupy the south half of South Dakota's western border. The mountains, which tower about 4,000 ft over the neighboring plains, include Harney Peak (7,242 ft), the highest point in the state and also the highest point in the United States east of the Rocky Mountains.

Custer has a moderate climate, which makes it a pleasant area to live. The average precipitation amounts in January are 0.20" while in June it is 1.15". Average temperatures in Custer are 24.9 degrees Fahrenheit in January and 73.4 degrees Fahrenheit in July.

D. Environmental Review Information

There are no known historic properties or flood plains identified within the project area. As part of the planning process, the necessary federal and state agencies are required the opportunity to comment on the proposed project. Kadrmas, Lee & Jackson contacted the United States Department of Interior: Fish and Wildlife Service, the United States Department of Agriculture: Natural Resources Conservation Service, the U.S. Army Corps of Engineers, Omaha District Planning Division, and the South Dakota Department of Game, Fish & Parks: Division of Wildlife. As was expected, no agency had any adverse comments to the proposed project. Agency responses are provided in Appendix A.

E. Public Interest

The City of Custer plans to hold a public hearing to discuss the proposed project. Minutes of the public hearing and all narrative discussions of steps taken to resolve any identified issues will be submitted for review.

II. EXISTING CONDITIONS

A. Wastewater Treatment Plant and Collection System

The City of Custer currently operates on a gravity sewer system within the city limits and discharges its wastewater via an interceptor line from the City to the WWTP. The wastewater collection system is routed east along SD Highway 16 to the WWTP, located approximately 0.25 miles north of HWY 16 along Spring Place (see Appendix B for a WWTP location map).

The WWTP was constructed in 1986 with a 75 year design life and has a design capacity of 565,000 gallons per day (GPD). The WWTP utilizes aeration ponds and finishing lagoons to treat the wastewater. Average monthly flows vary greatly from winter to summer months, primarily due to increased tourism in the summer. The WWTP treats an average of 350,000 GPD in the winter and 530,000 GPD during the summer months. The WWTP features two aerated ponds, each with a 1.5 MGal capacity. These two ponds typically cut the BOD_5 loading by 50% (per discussion with City staff). The wastewater is then routed through four stabilization ponds.

The first two are the primary ponds (ponds 1 and 1A) and these run parallel to one another, while the final two (ponds 2 and 3) run in a series. Finally, the treated water is discharged to Flynn Creek

The existing WWTP was built at a cost of approximately $1,000,000 in 1986; the present value of the existing WWTP, utilizing an interest rate of 3.25% and term of 30 years, is about $2,000,000; therefore, it would cost twice as much to re-build the existing WWTP today.

The wastewater collection system is comprised of approximately twenty miles of sewer mains, varying from 4-inches to 15-inches in diameter. There are roughly 1,000 service connections within the City's sanitary sewer network. The prevalent pipe materials found in the system are vitrified clay and PVC, while manholes are constructed of concrete, concrete brick, block, and corrugated metal pipe. A layout map depicting the current sanitary sewer collection system within the original town site is provided in Appendix C.

Wastewater data is collected by city staff on a daily, weekly and monthly basis, in compliance with the City's NPDES permit. Daily data includes flow readings, total gallons treated, discharge recordings, and a weather log. Weekly data includes BOD, TSS, pH and discharge temperature. Monthly Discharge Monitoring Reports are submitted to the South Dakota Department of Environment and Natural Resources (SDDENR) for the NPDES permit. The City is currently operating under NPDES Permit No. SD0023281 which expired June 30, 2009. The City is currently awaiting the approval of their permit renewal application.

The City of Custer has established Sewer System General Ordinances, Sewer System Use Regulations and Sewer Service Charges (see Appendix D). The City of Custer City Council raised their sanitary sewer user rates in September 2011 to take effect October 2011. Ordinance numbers 697 and 698 discuss the revised user rates and are located in Appendix D. A summary of the 2011 (past) and 2012 (current) utility rates are presented in Tables 2 and 3. A user fee analysis is presented in section III.E of this report.

Table 2

Utility Rate Summary in Dollars (2011)

	1000 Gal	2000 Gal	3000 Gal	4000 Gal	5000 Gal
Single Family					
Water	7.45	7.45	12.40	17.35	22.30
Water Bond	4.75	4.75	6.95	9.15	11.35
Wastewater	15.75	15.75	17.00	18.25	19.50
Garbage	17.45	17.45	17.45	17.45	17.45
Garbage Tax	1.05	1.05	1.05	1.05	1.05
Total SF Rate	46.45	46.45	54.85	63.25	71.65
Commercial & Multi-Family					
Water	18.10	18.10	24.20	30.30	36.40
Water Bond	4.75	4.75	6.95	9.15	11.35
Wastewater	18.50	18.50	23.50	28.50	33.50
Total COM./MF Rate	41.35	41.35	54.65	67.95	81.25

Table 3

Utility Rate Summary in Dollars (2012)

	1000 Gal	2000 Gal	3000 Gal	4000 Gal	5000 Gal
Single Family					
Water	7.90	7.90	13.15	18.4	23.65
Water Bond	4.75	4.75	6.95	9.15	11.35
Wastewater	16.70	16.70	18.54	20.38	22.22
Garbage	17.45	17.45	17.45	17.45	17.45
Garbage Tax	1.05	1.05	1.05	1.05	1.05
Total SF Rate	47.85	47.85	57.14	66.43	75.72
Commercial & Multi-Family					
Water	19.18	19.18	25.64	32.10	38.56
Water Bond	4.75	4.75	6.95	9.15	11.35
Wastewater	19.61	19.61	24.91	30.21	35.51
Total COM./MF Rate	43.54	43.54	57.50	71.46	85.42

B. Project Need and Planning Area Identification

The City of Custer chose to assess the sanitary sewer network in the original town site based on two key factors. One being that this section of town has the oldest sanitary sewer infrastructure and two, because this area has the highest percentage of maintenance issues. Because the WWTP consistently operates near the design capacity during the summer months, the City decided to evaluate their sanitary sewer network to identify possible sources of inflow and infiltration. By simply comparing flows at the WWTP with those pumped by the water supply system, it was evident that the sanitary sewer collection system is experiencing and treating excessive quantities of inflow and infiltration (I/I).

Inflow and infiltration are terms used to describe the ways that groundwater and stormwater enter into dedicated sanitary sewer systems. Inflow is water that enters sanitary sewer systems at points of direct connection to the systems, such as roof drains, downspouts, drains from window wells, driveways, and basement sump pumps. These sources are typically improperly or illegally connected to the sanitary sewer system. Infiltration is groundwater that indirectly enters sanitary sewer systems. Leaks in the sanitary sewer pipes or manholes may be caused by age related deterioration, loose joints, poor design, installation or maintenance errors, and root infiltration. Groundwater can enter cracks wherever sanitary sewer systems lie beneath water tables, or the soil above the sewer system becomes saturated.

Sources of I/I can overload the sanitary sewer system. Once the system becomes overloaded, wastewater flows can flood basements and cause manholes to open, releasing wastewater onto the surface.

When extraneous water enters the sanitary sewer, it ultimately enters the WWTP, at which point it must be treated. I/I costs wastewater treatment facilities and ultimately consumers large amounts of money in water treatment operating expenses. All water entering a WWTP must be treated as wastewater, causing an increase in operating costs proportional to the amount of clean water entering the sanitary sewer system due to I/I. By reducing I/ I, capital and operating costs can be lowered. Minimizing I/I can also increase the lifetime-capacity of a treatment facility and wastewater transportation system. The pumps that are involved with

wastewater treatment and transport operate 24 hours a day, seven days a week; however they must work harder as the sewer system's water level load increases. This puts an unneeded strain on the pumps and shortens the life expectancy of these expensive pumps.

C. Sanitary Sewer Assessment

In March 2011, the City of Custer elected to assess the condition of the sanitary sewer lines and manholes within the boundary of the original town site. This area has approximately eleven miles of gravity sanitary sewer and 225 manholes. Kadrmas, Lee & Jackson (KL&J) was contracted to provide a Sanitary Sewer Assessment of this defined area. The Sanitary Sewer Assessment included compiling and reviewing available City records, conducting a field survey to locate and assess the condition of all manholes within the project area, recommending sanitary sewer lines requiring televising, and preparing a Preliminary Engineering Report. In addition to the field survey, flow data was collected at various locations within the project area and suspect sanitary sewer mains were televised.

The sanitary sewer assessment was completed using a Condition Valuation Program to determine which pipe sections should be televised and ultimately to prioritize the rehabilitation of the sanitary sewer network. A Condition Valuation Program locates and characterizes specific defects or inadequacies of the sewer system and quantifies them in terms of contributing to overall problems (i.e. sewer main breaks, WWTP excess loading, sewer back-ups, etc.). The Condition Valuation Program establishes the critical basis for selecting and implementing rehabilitation measures to reduce inflow and infiltration, repair structural defects, regain or increase hydraulic capacity, and prioritize a rehabilitation plan in a cost-effective manner.

1. Condition Valuation Program
    a. Identify program objectives
    b. Develop asset inventory database
        - Pipe diameter, length, material, and alignments
        - Available GIS information
        - Inspection and maintenance records
        - Geographic information (i.e. elevation, latitude, longitude)
    c. Inventory asset condition
        - Manhole and pipe run inspections
            - Visual inspection of manholes
            - Televise pipe runs using Closed-Circuit Television (CCTV)
            - Condition Parameters
                1. Evidence of sediment, debris, and roots
                2. Pipe sags and deflections
                3. Offset joints
                4. Pipe cracks
                5. Inflow/Infiltration
                6. Location and condition of service connections
    d. Analyze data
        - Catalogue pipe defects observed during condition inventory
    e. Recommendations
        - Prioritize assets for corrective actions using available information
        - Provide Alternatives

2. Manhole and Sewer Line Inspections

KL&J developed a layout map of the existing sanitary sewer network utilizing existing design plans and by interviewing relevant city staff. Once all information was compiled, a field survey was conducted to confirm locations and visually inspect manholes. All survey information was entered into ArcMap, Geographic Information System software, to create a map of the sewer network.

Manhole inspections were performed by visually viewing the internal condition of the manhole from the surface. The manhole lid was removed and the condition of the manhole was inspected and documented. Apparent inflow and infiltration sources were also documented.

The following information was recorded:

- Cover diameter
- Presence of pick holes or vent holes in cover
- Barrel diameter
- Depth
- Condition
- Construction material
- Type:
  - Drop
  - Waterfall
  - Ramp
- Flow depth
- Evidence of inflow
- Evidence of infiltration

The manhole locations were documented using GPS software. Latitude, longitude, and rim elevations were recorded.

The primary purpose of the manhole visual inspection was to identify unaccounted for connections, inflow, and infiltration. A secondary objective was to identify structural integrity or other potential safety hazards. Information collected through the visual inspection was added to the ArcMap database and used in the conditional valuation program for the sewer network.

Visual inspection of sewer mains from the manholes was completed to gather supplemental information regarding the location, materials and size of sewers. The following information was obtained from the visual inspection of sewer mains from the manhole:

- Diameter
- Invert elevations
- Material

3. Flow Monitoring

Flow Monitoring was completed using an ISCO 2150 Area Velocity Module flow meter and the ISCO Flowlink 5 Software. The flow meter was installed in the

following manholes: 7-30 (intersection of Washington and 11th Streets); 7-56 (intersection of Gordon and 11th Streets); and 7-57 (on Gordon Street mid-block between 11th Street and Park Avenue). The flow metered manholes were chosen due to high amounts of flow observed during the manhole inspection, relative to their upstream areas. Figure 1 shows the manholes that were metered.

Figure 1
Flow Meter Locations

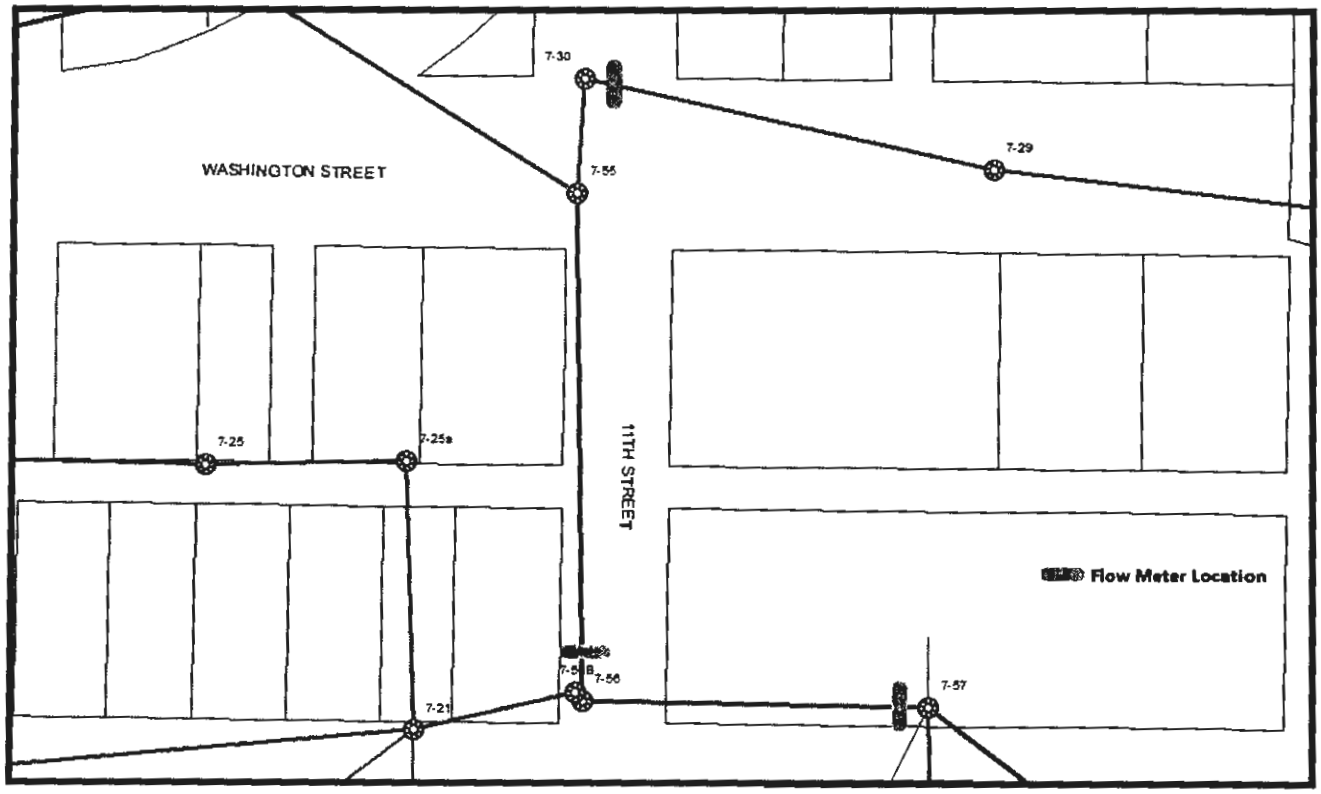

Table 4, Flow Meter Data, is provided to demonstrate the relationship between precipitation and I/I. Data for April 16 to April 18 is unavailable due to a flow meter malfunction. There is not enough information to determine if inflow or infiltration is present near manhole 7-30. The rainfall data and flow meter information indicate that approximately three days following a rainfall event, the flow rate and flow level at manhole 7-57 increase significantly. This increase can be attributed to infiltration entering the sewer pipe. Likewise, it is apparent that

the high flow rates at manhole 7-56 on 4/19/2011 and 4/20/2011 can be attributed to the precipitation on 4/18/2011. It is perceptible that sewer mains located hydraulically above manholes 7-56 and 7-57 are probable sources of infiltration.

Table 4
Flow Meter Data

Date	Manhole with Flow Meter	Precipitation (inches)	Flow Rate (gpm)	Flow Level (feet)
4/15/2011	7-30	0.00	46.7	0.246
4/16/2011	7-30	0.00	NA	NA
4/17/2011	7-30	0.13	NA	NA
4/18/2011	7-30	0.38	NA	NA
4/19/2011	7-30	0.09	41.4	0.248
4/19/2011	7-56	0.09	307.6	0.158
4/20/2011	7-56	0.04	310.6	0.150
4/21/2011	7-56	0.05	216.7	0.139
4/22/2011	7-56	0.14	238.7	0.132
4/23/2011	7-56	0.00	187.8	0.126
4/24/2011	7-56	0.00	193.2	0.125
4/25/2011	7-56	0.04	216.3	0.125
4/26/2011	7-56	0.22	203.6	0.124
4/27/2011	7-56	0.25	184.6	0.123
4/28/2011	7-56	0.00	186.4	0.124
4/29/2011	7-56	0.00	248.3	0.124
5/20/2011	7-57	0.59	12.2	0.115
5/21/2011	7-57	0.23	10.8	0.105
5/22/2011	7-57	0.01	10.2	0.104
5/23/2011	7-57	0.22	24.5	0.148
5/24/2011	7-57	0.08	32.8	0.183
5/25/2011	7-57	0.01	35.6	0.191
5/26/2011	7-57	0.05	37.8	0.193

4. Closed-Circuit Television (CCTV)

Closed-Circuit Television (CCTV) inspections collected data which was used to document specific sewer main defects. A-1 Sewer and Drain, Inc. was contracted to televise approximately 25,500 feet of sewer mains.

CCTV inspection uses a television camera mounted on a remote controlled, self-propelled robotic device connected to a video monitor with pan and tilt capabilities. The robotic system is placed directly into the sewer through a manhole. Once inside the sewer line the remote controlled device moves through the sewer, which allows the operator to examine the pipeline between manholes.

The CCTV system relays live footage to a mobile survey unit where it is electronically recorded. If defects are located, the operator will stop and investigate in more detail. An electronic footage counter is connected to the camera, enabling the operator to identify the location of the defect. For this project, digital data recordings were used to assess the condition of the sanitary sewer pipes and to analyze the pipe sections for remediation or treatment options.

The 25,500 feet of televised sewer mains ranged in diameter from 6-inches to 15-inches. There were 720 noted defects within the televised mains. The defects found during the CCTV work included cracks (35%), broken pipes and holes in pipes (5%), offset pipe joints (4%), grease build-up (1%), roots (17%), sags (33%), lateral connection problems (4%), and pipe deformations (1%). Sample reports from the CCTV project are located in Appendix E. Infiltration, a symptom of a defect, was recorded during the televising. The conditional ratings were based on the criteria defined in Table 5.

Table 5
Condition Assessment Criteria

Condition	# of Defects per 100 feet
Excellent	0
Good	Less than 3
Fair	3 to 5
Poor	More than 5

See Appendix F for a table summarizing defects recorded during televising. Twenty-three percent of lines televised were found to be in poor condition. A map depicting the sanitary sewer main conditions is located in in Appendix G.

D. Wastewater Flow

The average wastewater flow in the Custer wastewater collection system was determined using the influent/weather logs provided by the City (logs are located in Appendix H). The data from the logs is compared to the gallons of water used by the City's residents. The water use data for the City of Custer during 2010 is shown in Table 6. This data indicated that the average daily volume of water billed during the year 2010 was approximately 178,990 GPD. The average was based on the average monthly usage for January through December, because the City of Custer has highly varying seasonal consumptive water use due to tourism.

Table 6
Average Monthly Water Usage for 2010

Month	Gallons Used	GPD	GPCPD
January	3,910,000	126,129	61
February	3,380,000	120,714	58
March	3,870,000	124,839	60
April	4,010,000	133,667	65
May	5,410,000	174,516	84
June	7,450,000	248,333	120
July	8,480,000	273,548	132
August	9,570,000	308,710	149
September	6,980,000	232,667	113
October	4,750,000	153,226	74
November	3,810,000	127,000	61
December	3,860,000	124,516	60
Average (year)	5,456,667	178,989	87
Dec., Jan. & Feb. Average	3,716,667	123,786	60

Note: These values have not been adjusted to the 80% usage rate impacting the WWTP.

The water usage rate was used to determine if excess amounts of wastewater flows are being treated due to possible sources of inflow and infiltration. Because the majority of used water reaches the sanitary sewer collection system, it was assumed that 80% of the used water reaches the wastewater collection system (per Section

I.C.2 Recommended Design Criteria Manual for Wastewater Collection and Treatment Facilities by SD DENR) or 143,192 GPD.

The City of Custer's population of 2,067 persons uses the wastewater collection system. Based on the water use data and the population, the estimated average daily wastewater flow is about 69.3 GPCPD (143,192 GPD / 2067 persons). This value is above the minimum value of 60 GPCPD (as outlined in Section I.C.2 of the Recommended Design Criteria Manual for Wastewater Collection and Treatment Facilities by SD DENR), therefore the calculated value of 69.3 GPCPD will be used for analysis.

E. Inflow and Infiltration (I/I)

The reduction and control of I/I in sanitary sewer systems should be considered with regard to a maintenance program, because by reducing the extra load placed on the WWTP due to I/I, the life of the WWTP is ultimately lengthened. The first step in resolving any I/I problems is to determine how significant the problem is. An evaluation of the sewer system will determine the sources of I/I and provide guidance to determine a cost effective, corrective action plan.

KL&J reviewed influent weather logs kept by staff at the WWTP for 2009 and 2010 (see Appendix H). The records track daily influent gallons treated and weather conditions, such as, temperature and precipitation. Upon review of the records, it was evident that the sanitary sewer collection system exhibit signs of both inflow and infiltration. Inflow is marked by a significant surge in influent on the days with a precipitation event of 0.75-inches or greater. Infiltration is characterized by influent increases approximately 2 to 3 days following a rain or snow melt event. While no sources of inflow were found during the CCTV inspection, the influent weather logs demonstrate its presence and effect on the WWTP load. Table 7 illustrates the average influent levels entering the WWTP in 2010.

Table 7

Average Monthly Sanitary Influent for 2010

Month	Influent Gallons	GPD	GPCPD
January	8,606,900	277,642	134
February	7,475,490	266,982	129
March	9,523,400	307,206	149
April	11,820,900	394,030	191
May	18,078,400	583,174	282
June	19,338,500	644,617	312
July	19,557,600	630,890	305
August	15,713,500	506,887	245
September	12,671,200	422,373	204
October	10,643,600	373,342	166
November	9,114,300	303,810	147
December	9,580,000	309,032	150
Average (year)	12,676,983	415,832	201
Dec., Jan. & Feb. Average	8,554,130	284,552	138

While existing treatment levels during the summer months are consistently at or near the WWTP's design capacity of 575,000 gpd, the effluent discharge logs for May, June and July of 2010 display the eminent need for reducing the additional loading of I/I, as during these three months, an average of 583,174 GPD, 644,617 GPD and 630,890 GPD, respectively, were treated; and these loadings are above the plants design capacity. This additional loading places stress on the WWTP.

Because the influent at the WWTP is significantly higher than the water usage rates (138 GPCPD compared to 69.3 GPCPD), it is evident that the sanitary sewer collection system experiences substantial sources of I/I. The first step is to quantify the amounts of I/I the enter the collection system; section I.C.2 of the Recommended Design Criteria Manual for Wastewater Collection and Treatment Facilities by SD DENR states that:

> If no actual data on infiltration is available, an assumed infiltration design allowance for existing sewers should be added to the design flow. For existing systems, the minimum infiltration design allowance for the existing sewers and service lines shall be no less than 200 gallons per inch of pipe diameter per mile of pipe per day.

This criteria was used to determine if the allowable quantity of I/I in the sewer collection system. The original town site has approximately eleven miles of gravity

sanitary sewer. Table 8 identifies the allowable infiltration in GPD for this portion of the City. From this information, 6,069 GPD of excess flow due to I/I is considered acceptable within the original town site are of Custer.

Table 8
Allowable Infiltration

Diameter (in)	Total Length Sanitary Sewer (ft)	Total Diameter-Length (in-mile)	Allowable Infiltration (GPD)
4	1,056	0.8	160
6	6,275	7.1	1,426
8	43,393	6.7	1,331
10	2,036	3.9	771
12	4,858	11.0	2,208
15	304	0.9	173
		TOTAL=	**6,069**

This value was calculated for the eleven miles of sanitary sewer that line within the original town site. For this report, this value was doubled to account for the additional 9 miles of sewer mains within the city limits.

The next step is to compare the monthly water use values, plus allowable infiltration (12,138 GPD) to the monthly influent values entering the WWTP. Table 9 displays this relationship. From comparing the average monthly water usage (including allowable infiltration values) to the average monthly sanitary influent, it is apparent that the sanitary sewer collection system experiences high volumes of I/I. The table above shows that on average, an additional 224,705 GPD are treated.

Table 9

Monthly Water Usage + Allowable Infiltration vs. Monthly Sanitary Influent

Month	Water Usage + Allowable Infiltration (GPD)	Sanitary Influent (GPD)	Difference (GPD)
January	138,267	277,642	139,375
February	132,852	266,982	134,130
March	136,977	307,206	170,230
April	145,805	394,030	248,225
May	186,654	583,174	396,520
June	260,471	644,617	384,145
July	285,686	630,890	345,204
August	320,848	506,887	186,039
September	244,805	422,373	177,569
October	165,364	373,342	177,978
November	139,138	303,810	164,672
December	136,654	309,032	172,378
Average (year)	191,121	415,832	224,705

The City of Custer realizes that it is not possible to remove every I/I source, but they are taking the initiative to greatly reduce I/I to an acceptable level. This large amount of I/I costs the city, and ultimately the consumers, each year in operational costs. In 2010, the City of Custer spent $410,317 operating their WWTP. The plant treated a total of 152,123,790 gallons, for a unit cost of $0.0027 per gallon ($410,317 / 152,123,790 gallons). The additional 224,705 GPD costs the City $606.09 per day (224,705 GPD * $0.0027 per gallon) or $221,221.83 per year ($606.09 per day * 365 days per year).

The current population places an average load of 69.3 GPCPD (as previously determined based on water use rates) on the WWTP. Assuming that the City of Custer follows its current population trends, in 2030, there will be an additional 511 people utilizing the sewer network and loading the WWTP with an additional 35,412 GPD. This population expansion alone will increase the loading on the WWTP by 25% (35,412 gal / 143,243 gal), therefore it is imperative that the I/I issues be remediated so that the WWTP can handle the increased population loading.

F. Effluent Discharge

The WWTP discharges to a non-fisheries water. Approximately six miles before the discharge water enters Flynn Creek (a fisheries water), the US Forest Service utilizes the discharge water to water cattle on grazing land. The effluent from the wastewater treatment plant must meet the requirements of the SDDENR Surface Water Discharge Permit; this permit sets forth the effluent limits and sampling requirements for the plant. The WWTP consistently operates within the discharge permit parameters. Since the facility was built in 1986, it has been awarded the South Dakota Excellence in Operations and Maintenance award numerous times. Table 10 below summarizes the maximum limits for effluent discharge. Copies of the raw water effluent discharge at Outfall 001 and lab test results for 2009 and 2010 are located in Appendix H. The effluent values in this report only pertain to Outfall 001.

Table 10
Maximum Effluent Limits

	Outfall 001 from WWTP	Outfall 002 from Golf Course	Outfall 003 To French Creek
TSS 30 day Average	45	45	Not Allowed
BOD 30 day Average	45	45	Not Allowed
pH	6 – 9	6 – 9	Not Allowed

The City of Custer operates four stabilization ponds. The first two (1 and 1A) are the primary ponds and operate parallel to one another. The surface area of pond 1 is 4.2 acres and of pond 1A is 4.6 acres. The next two ponds (2 and 3) run in a series following the two primary ponds. The surface area of pond 2 is 12.5 acres and pond 3 is 6.1 acres. Chapter IV of the Recommended Design Criteria Manual for Wastewater Collection and Treatment Facilities by the SD DENR gives the recommended design criteria for wastewater stabilization and pollution control ponds. This criteria was used for all assumptions in calculating organic loading. The average BOD_5 was assumed to be 0.20 pounds person per day. Therefore, calculating the BOD_5 loading entering the WWTP is 413.4 pounds per day (2,067 persons * 0.2 pounds per person per day).

The maximum design loading ton the primary cells is 30 pounds of BOD_5 per acre per day, therefore the maximum design load for the two primary stabilization ponds is

264 pounds per day [(4.2 acres + 4.6 acres) * 30 pounds per acre per day]. The total organic loading for the total surface area shall not exceed 20 pounds of BOD_5 per acre per day or 548 pounds per day for the entire pond system [(4.2 acres + 4.6 acres + 12.5 acres + 6.1 acres) * 20 pounds per acre per day]. The existing four pond system is sized appropriately for the current population (515.6 pounds per day compared to a capacity of 548 pounds per day).

In 2030, it is estimated that the population is expected to increase by 511 persons. At this time, the BOD_5 loading entering the WWTP will be 515.6 pounds per day (2,578 persons * 0.2 pounds per person per day). The existing system of ponds will still be adequate to carry this future load.

Per the design criteria, the seepage rate for the primary cells shall not exceed 1/16 inch per day, therefore this value was used for calculations. The design period is 180 days per the design criteria manual. Table 11 illustrates the estimated 180 day influent to the stabilization ponds and the required pond storage area for the full year and for the winter months only.

Table 11
Hydraulic Loading on Stabilization Ponds

Estimated Pond Influent	Annual	Dec-Jan-Feb
Population	2067	2067
Water Use (GPCPD)	69.3	69.3
Water Use Flows (GPD)	143,243	143,243
I/I (GPD)	415,832	284,552
Evaporation (GPD)	46,502	46,502
Design Storage Time (days)	180	180
180-day Pond Influent	92,263,212	68,632,812
Required Pond Storage Area		
Stabilization Ponds Seepage Rate (inch/day)	1/16	1/16
Stabilization Ponds Depth of Storage (ft)	4	4
Stabilization Ponds Area (acres)	27.4	27.4
Required Pond Area (acres)	71.7	53.6
Existing Pond Area (acres)	27.4	27.4

From the data in Table 11, the hydraulic loading shows that the ponds are undersized for both cases (annual and winter months only). However, the City has had no problems meeting their discharge limits under these existing conditions and therefore it does not appear to be undersized. The effluent discharge records for 2009 and 2010 were reviewed and are summarized in Table 12 below. These records confirm that the City regularly meets the discharge limits identified in their NPDES permit.

Table 12
Average Effluent Test Results from Outfall 001

2009 and 2010	BOD5 (mg/L)	Total Suspended Solids (mg/L)	pH
Effluent Average	14.42	11.92	7.42
Permit Maximum	45	45	6 - 9

III. ALTERNATIVES

The recommended improvement plan for the City of Custer wastewater collection system, assessed as part of this project is based upon the information, evaluations, and assessments presented in this report. Alternatives considered as part of this assessment include treatment (no action), rehabilitation utilizing trenchless technology and replacement by traditional open-cut trenching. No alternative collection systems were considered in this report.

The proposed plan includes recommended maintenance and reconstruction of existing facilities in order to further develop the capital improvement plan. Due to the topography of the city and the heavy tourist traffic during the construction season, consideration is given to utilizing trenchless technologies for the repair of existing sanitary sewer mains.

Estimates of probable cost for each alternative can be found in Appendix J and are discussed in Section III.E of this report.

A. Alternative 1: Treatment (No Action)

The first wastewater treatment collection alternative that was considered is the Treatment or the "No Action" alternative. Because this alternative will not address any of the deficiencies in the collection system, it is not considered as an acceptable alternative.

B. Alternative 2: Trenchless Rehabilitation Methods

The second and third wastewater treatment collection alternatives that were considered, was to rehabilitate selected sections of the collection system that were identified as sources of I/I during the CCTV work previously completed by A-1 Sewer & Drain, Inc. Appendix I depicts the areas that will be rehabilitated with this alternative. The recommended rehabilitation areas are discussed further in section III.D of this report.

Trenchless technologies provide a cost effective, socially responsible and 'green' alternative to typical open-cut methods of installing new main line and lateral pipes.

Today, an estimated 50% of sewer rehabilitation is done using trenchless technologies because project costs are potentially reduced by 20 – 40% through the use of these methods. Traditional direct-bury, open-cut or exhume and bury pipe installations can be disruptive, impractical, and limiting; while trenchless methods reduce project costs and business interruption costs. There are areas within the City of Custer that will greatly benefit from the use of trenchless technology to rehabilitate the sanitary sewer pipe network. The most widely used trenchless technologies are Cured In-Place Pipe, Slip Lining, and Pipe Bursting. In lieu of replacing sanitary sewer manholes, existing manholes in fair to poor condition can be re-lined using cement-like, acrylic emulsion based, highly flexible protective coating. The result is a barrier which is resistant to water, moisture and abrasion.

1. Cured In-Place Pipe (CIPP)

   CIPP is a trenchless installation technology that utilizes the existing pipe network by inserting a tube with a thermosetting resin inside of the existing pipe. The resin is heat cured and expands to form a tight fitting seal, incorporating the existing pipeline into the finished product, resulting in improved performance of the original pipeline. Because CIPP utilizes the existing pipe network, design is limited by the size and slope of the existing pipe, as the installed liner must be smaller than the existing pipe. One of the biggest advantages of CIPP is that it can be done with little or no excavation. A key design consideration is the ability of the CIPP to withstand buckling; therefore, the pipe wall thickness design is based on the anticipated effect on pipeline creep of external loads over a 50 year period.

   CIPP is effective for restoring main lines as well as lateral connections, as installation can be made from manholes and cleanouts. CIPP's use in lateral rehabilitation cause the least amount of surface disturbance of any rehabilitation/repair method available because only one point of access is needed. Installation can be completed by either the "inversion" or "pulling-in" methods. Installation records should be kept on the installation and curing of the resin and field specimens should be taken and tested by an independent laboratory. Field inspection of the completed CIPP liner should look for annular gaps, interior bulges, ribs, ripples, folds and other irregularities. The interface between the exterior pipe and the liner should be inspected at the manhole entrance and should be watertight and the finished ends should be smoothly

cut. A final CCTV inspection should be conducted once installation is complete to ensure proper installation and fit.

2. Slip Lining

   Slip lining is an effective method for certain sanitary and storm sewer rehabilitation projects. Slip lining uses the existing utility alignment and excavation is kept to a minimum, which limits utility conflicts, hits, and disturbances to customers. Excavation portals are constructed to gain access to the buried existing pipe, and the liner pipe is installed from the portals. Once the liners are fit into place, the annular space between the finished line and existing pipe is grouted. The size of the excavation portals is dependent on many factors, including pipe run length and pipe size. Adequate planning needs to be considered to determine the sufficient portal size.

   One drawback to this method is that the new pipeline needs to be smaller than the existing line – while the flow characteristics of the new line may make up for some of the hydraulic capacity lost in this trade-off, downsizing pipelines is not the way that most entities want to rehabilitate their systems.

   Grouting may be used after a pipe has been renewed through Slip lining to stabilize the liner by grouting the annular space remaining after insertion. The primary applications of grouting in underground, trenchless applications include manholes, mainline, and lateral connections.

3. Pipe Bursting

   Pipe bursting is a method that involves replacing a host pipe by fragmenting the existing conduit and installing a completely new pipe of equal or larger diameter in its place, preserving or increasing carrying capacity. Pipe bursting offers size on size and upsizing capability with the new pipeline, therefore eliminating the concern of downsizing the new pipeline. The process involves initial cracking, followed by fragmenting the host pipe, creation of a new tunnel and simultaneous installation of the new replacement pipe. Pipe bursting is a method best suited for straight pipe runs. Pipe bursting may be appropriate to replace pipes that are deteriorated to the point that lining methods may not be employed and open cut replacement is not cost effective or feasible.

Though pipe bursting does require excavation for starting and receiving pits, it minimizes surface disruptions associated with utility line work in urban environments and limits underground conflicts by utilizing the same utility corridor and the existing alignment. It has the potential for cost savings when compared to direct bury replacement, as surface disruptions and replacements are minimized. Pipe bursting can be used to install a variety of types of pipe: HDPE, clay, steel, fiberglass, polymer, ductile iron, concrete and PVC. Applications of pipe bursting are water, sanitary sewer mains and service lines, gas lines and communication ducts. Compact bursting equipment and tools have been developed specifically for sewer laterals.

C. Alternative 3: Traditional Rehabilitation Methods

The third wastewater treatment collection alternative that was considered is to rehabilitate the same selected sections of the collection system as alternative 2, only traditional rehabilitation methods will be used. Traditional rehabilitation methods, such as open trench, are typically less costly than trenchless technologies. The cost savings should be weighed against the additional public disruption caused by open trench sewer installation.

D. Recommended Rehabilitation Areas

The conditional assessment, based on the information gained from visual inspection and existing data, was utilized to determine the most critical areas for sewer main remediation. The pipe runs and manholes recommended for remediation were grouped and prioritized by two key factors. The first factor was condition level; higher priority was given to sewer mains that were found to be in poor condition, as well as those pipe runs that were discovered to have the most infiltration sources. The second factor was geographic location within the city. It is cost efficient for repair or replacement work to be contiguous, therefore, the recommended priority areas were grouped by location.

During the CCTV inspection, 23 areas were identified as sources of infiltration. The sanitary sewer mains where the most significant sources of infiltration were identified are on Mt. Rushmore Road from 7th Street to 10th Street and on 10th Street

from Crook Street to Washington Street (see Appendix G for map and table detailing infiltration locations). Because French Creek runs through the original town site, it is estimated that the additional flows treated due to I/I can be reduced through rehabilitation of the recommended sewer lines presented in this report. Mt. Rushmore Road (SD Highway 16) is a main thoroughfare for citizens and tourists, and therefore when the City chooses to correct the deficiencies in these lines, alternative trenchless methods should be considered.

The highest priority (Priority 1) area is along Mt. Rushmore Road between Centennial Drive and 10th Street, and is also bound by Crook Street and Washington Street. This area contains the sewer mains in the poorest condition and was also found to be a significant source of infiltration during the CCTV inspection. Since this area is centered in the business district of Custer, traditional open trench methods for sewer main repair are not ideal. This area is a prime candidate for the use of trenchless technologies for rehabilitating the sewer mains in order to reduce disruption to the public during construction.

The main portion of the second priority area (Priority 2) is bounded by Harney, Montgomery, 4th, and 7th Streets. An additional area near 6th and Lincoln Streets is included with Priority 2. Two manholes will need to be installed within this area. The future manhole on Lincoln Street will remove an existing bend located in the sewer main while the new manhole near 6th Street will replace an existing tee structure.

The area in Priority 3 is in the northwest portion of the original town site. In addition to the improvements in this area, the project will include installing a new manhole to replace an existing sewer main bend near 1st and Clay Streets.

The Priority 4 area includes some of the sewer mains in the south part of town. With the work completed in the priority 4 area, there are three manholes that should be abandoned (as shown in blue on the layout map). These manholes should have all pipes plugged with concrete, the upper 4 ft. of the manhole should be broken or removed and the manhole filled with compacted backfill material. A Priority Area Map is located in Appendix H.

E. Estimate of Probable Cost

Estimates of Probable Cost are provided for each priority area, utilizing both traditional and trenchless methods (see Appendix J). Trenchless methods are strongly recommended for the Priority 1 area in order to minimize disruption of traffic through the City's primary commercial district. The use of trenchless construction methods would be beneficial to Priority 1 to minimize disruption to the public during construction. The local population would benefit from the use of trenchless technologies in the remaining priority areas, but budget constraints may deter their use.

All estimates for traditional trenching methods are based on a 6 foot wide trench for repair purposes. Existing asphalt sections are assumed to contain 3-inches of asphalt on 4-inches of base course, while concrete paved streets are assumed to be 6-inches of concrete on 4-inches of base course. Existing gravel alleys are assumed to have an average gravel thickness of 6-inches. All manholes within the area are assumed to be replaced during construction. The estimates for trenchless methods include a quantity to re-line existing manholes; for this estimate, it is assumed that all manholes that are in fair to poor condition will be re-lined during the rehabilitation project. The Estimates of Probable Cost are for planning purposes only. Detailed cost estimates should be developed during the design of any rehabilitation projects.

The City of Custer raised their sanitary sewer user rates in September 2011 to take effect for the 2012 budget year in October 2011. The rates were amended in order for the City to be eligible for grant funding; therefore the sewer rate had to be at a minimum of $22 for a 5,000 gallon user. The rates that went into effect in October 2011 meet this criterion. At this time, the City does not anticipate that user rates will be affected by the outcome of additional funding; however, a sewer rate analysis and a rate increase analysis were completed and are located in Appendix K. These analyses determined that the monthly wastewater user fee needs to be raised by a minimum of $12.46 per month (per 5,000 gallons) in order to erase the annual deficit that this project will create. The rates should be increased to $34.70 per month for residential users and $47.97 per month for commercial users (per 5,000 gallons).

The estimate of probable cost for the treatment alternative is based on the estimate that the City spends an average of $221,221.83 per year treating the additional flows caused by I/I. This value was adjusted assuming a 3% inflation rate over the next 10 years. A summary comparison of each estimate is presented in Table 13.

Table 13
Estimate of Probable Cost Summary

	Open-Trench	CIPP	Slip Lining	Pipe Bursting	Treatment (No Action)
Priority 1	$573,429.30	$596,293.00	$600,596.50	$607,218.00	NA
Priority 2	$125,909.40	$154,268.60	$159,071.50	$155,270.00	NA
Priority 3	$110,573.50	$118,536.60	$127,391.50	$120,795.00	NA
Priority 4	$88,178.80	$100,963.60	$104,236.00	$99,582.00	NA
Total	**$898,091.00**	**$970,061.80**	**$991,295.50**	**$983,065.00**	**$1,887,067.08**

IV. RECOMMENDATIONS AND SUMMARY

In summary, rehabilitating the recommended sewer mains will reduce the additional I/I entering and being treated by the WWTP. Further, rehabilitating the recommended sewer mains will reduce operating costs at the WWTP and this savings can be passed on to the consumer or reinvested in the budget for future sanitary sewer system upgrades. If no action is taken, the City will continue to treat unnecessary flows due to I/I and will likely have to replace their WWTP before it exhausts its design life.

It is recommended that the City of Custer rehabilitate the recommended priority areas, in the order recommended, to reduce the unnecessary load on the WWTP. Alternative 2 (Trenchless Rehabilitation Methods) is the recommended alternative. This alternative will allow the City to reduce their influent flows due to I/I and offers minimal surface disruption to the public. The recommended remediation areas are prioritized to remove the most I/I and priority 1 area should be constructed during the current fiscal year, and the remaining 3 priority areas can follow during the subsequent fiscal years.

APPENDIX D

City of Custer Ordinances

13.12 Sewer Service System Generally

13.16 Sewer System Use Regulations

13.20 Sewer Service Charges

13.24 Water and Sewer Rate Classifications

Ordinance 697

Ordinance 698

Chapter 13.12

SEWER SERVICE SYSTEM GENERALLY

Sections:

13.12.010 **City sewer system—Supervision.**
13.12.020 **Duties.**
13.12.030 **Excavations for service sewers—Permits.**
13.12.040 **Issuance of permits.**
13.12.050 **Specifications.**
13.12.060 **Inspection.**
13.12.070 **Filling.**
13.12.080 **Sewer repair.**
13.12.090 **Refuse prohibited.**
13.12.100 **Connections to sewer main.**
13.12.110 **Minimum grade.**
13.12.120 **Materials used in sewers and connections.**
13.12.130 **Construction over sewer and water lines.**
13.12.140 **Interference with natural drainage.**
13.12.150 **Dimension of house or building drain.**
13.12.160 **Drains in public garages and washracks.**
13.12.170 **Cross-connections.**
13.12.180 **Cesspool drainage into streets and gutters prohibited.**
13.12.190 **Responsibility—Breakage of lines.**
13.12.200 **Use of sewer system effluent water.**

13.12.010 City sewer system—Supervision.

The city sewer system shall be under the supervision of the public works director who shall be responsible to the appropriate common council. (Ord. 603 (part), 2004: prior code § 5-101)

13.12.020 Duties.

The public works director shall make or supervise and inspect and approve all taps of public sewers in addition to such other duties as shall be prescribed by the common council or by the ordinances of the city. (Ord. 603 (part), 2004: prior code § 5-102)

13.12.030 Excavations for service sewers—Permits.

No person shall make any excavation in the streets, alleys, public property, or lay any service sewer therein without first obtaining a permit therefor from the public works director. (Ord. 603 (part), 2004: prior code § 5-103)

13.12.040 Issuance of permits.

The public works director may issue permits for excavations or laying of service sewer as provided in the foregoing section and only after compliance with the following:

A. Application shall be made, in writing, to the public works director or the community development director showing the applicant's name, address, type of construction, materials to be used, estimated time of completion, location of proposed excavation and such further information as may be required by the appropriate common council committee, city council or the public works director.

B. The permit shall entitle the owner to have a tap of the public sewer made or supervised and inspected by the public works director as well as entitle the owner thereof to perform the acts therein authorized. If such use is for residential purposes, the application shall state the number of families or residents to be served thereby, and such tap and sewer use shall be limited to the number of families or residences served thereby, and as set forth in the application.

C. 1. There is imposed a special sewer use assessment charge, which the charge shall be considered as a payment and as a condition of obtaining service, and for the payment of costs incurred in the construction within the 1990 sewer assessment district for the facilities to which the customer shall now be connected; and any fees so imposed shall be dedicated to the fund and to the repayment of the obligation for the construction of facilities within the sewer assessment district or to the maintenance of the same on certain properties and connections to the Custer City sewer main as set forth in this chapter, charges being as follows:

a. Commercial. All properties used for commercial purposes are located within commercial zones: seven thousand two hundred dollars ($7,200.00).

b. Light Commercial. All properties occupied as a residence, but also having a substantial simultaneous commercial use: five thousand one hundred dollars ($5,100.00).

c. Residential. All property used principally for residential purposes: three thousand one hundred dollars ($3,100.00).

d. Multifamily Developments.

i. Trailer Parks. All trailer parks within the 1990 Custer sewer district shall be subject to an assessment of six thousand two hundred dollars ($6,200.00) for the first two trailers, plus two hundred dollars ($200.00) for each additional trailer or trailer spot to be utilized. If an assessment has been paid or imposed under this subsection for the Custer sewer district, the amount of the assessment collected or imposed up to the amount of six thousand two hundred dollars ($6,200.00), shall be credited to the assessment made under this subsection.

ii. Apartments. All multifamily apartments within the 1990 Custer sewer district shall be subject to an assessment of six thousand two hundred ($6,200.00) for the first two units; and the sum of two hundred dollars ($200.00) for each additional family unit within the development. Credit shall be given for any assessment paid or imposed pursuant to the provisions of this subsection up to the sum of six thousand two hundred dollars ($6,200.00).

2. The following property shall be subject to the special sewer use assessment charge:

a. Upon all properties within the 1990 sewer assessment district that are further subdivided or where on additional structures including residences and business structures requiring sewer connections are added, and which the structures or subdivided properties would have been subject to a separate assessment had they existed at the time of the 1990 special

assessment, notwithstanding the fact that the subdivided properties are included in the whole of the property which was subject to one assessment.

b. Upon all properties that are not within the district but shall hereafter request to connect to the Custer City sewer system and shall utilize or connect to the sewer mains within the district that were constructed as a part of the 1990 sewer district and assessment. The sewer connection charge shall be reduced by any amount of a special assessment that shall be imposed upon the properties for the construction of the additional sewer main and facilities.

3. Special sewer use assessment charges shall not be considered as a connection or sewer tap fee as set forth in Chapter 13.16, which shall remain in full force and effect. Any commitment of the city to provide a free sewer tap or connection to any individual hereafter requesting connection to the Custer City sewer system shall be allowed as a credit in the amount as set forth in Chapter 13.16 as the then existing sewer connection or tap fee, against the special sewer use assessment charge imposed under this subsection. The city council may also at its discretion waive the imposition of the sewer tap or connection fee as set forth in Chapter 13.16, in any instance when the special sewer use assessment charge is imposed. (Ord. 603 (part), 2004: Ord. 359, 1991; Ord. 350, 1990; prior code § 5-104)

13.12.050 Specifications.

The size, slope, alignment, materials of construction of all sanitary sewers including building sewers, and the methods to be used in excavating, placing of the pipe, jointing, testing and backfilling the trench, shall all conform to the requirements of the building and plumbing codes or other applicable rules and regulations of the city. In the absence of suitable code provisions or in amplification thereof, the materials and procedures set forth in appropriate specifications of the A.S.T.M. and W.P.C.F. Manual of Practice No. 9 shall apply. (Ord. 603 (part), 2004: prior code § 5-105)

13.12.060 Inspection.

No sewer trench shall be filled or sewer pipe covered until the service sewer has been first inspected by the public works director or his assistant. Persons making sewer connections shall give at least eight hours' notice to the public works director of the time when such service sewer shall be ready for inspection. The public works director shall inspect such sewer within a reasonable time and if such service sewer is not properly laid or connected, the public works director shall order the same to be taken out and relaid. When such service sewer is completed, approved, and permission granted, the owner or person in charge shall be allowed to use the same. (Ord. 603 (part), 2004: prior code § 5-106)

13.12.070 Filling.

The filling of earth around and on top of all connecting pipes with lateral or main sewers shall be done in a manner to obtain the greatest compaction possible. Earth shall be laid and tamped in regular layers not exceeding twelve (12) inches in depth up to the road surface and the street or alley shall be left in as good of a condition, whether paved or unpaved, as it was prior to the laying of such pipe. (Ord. 603 (part), 2004: prior code § 5-107)

13.12.080 Sewer repair.

Whenever any sewer connecting a building with a common sewer or another drain becomes obstructed, broken or out of order in any way, the person in charge of the premises drained by such sewer shall within forty-eight (48) hours after notice from the public works director, reconstruct, repair or cleanse such sewer. In case of neglect or refusal the public works director shall report the same to the common council who shall cause such sewer to be reconstructed, repaired or cleansed at the expense of the person in charge who shall be charged in the manner as for a special assessment. Further, in the event that any person, firm, partnership or corporation is responsible for the obstruction of any city trunk or other sewer line, the person, firm, partnership or corporation shall be charged for the appropriate repair in the same manner as for a special assessment. (Ord. 603 (part), 2004: prior code § 5-108)

13.12.090 Refuse prohibited.

No one shall deposit or permit to be deposited in any sewer connected with a public sewer any garbage, hair, ashes, foodstuffs, rags, automobile oil or grease or any other thing whatsoever except feces, urine, necessary closet paper, liquid housewater and domestic garbage processed by an approved disposal unit. Further, no one shall permit or allow the roof drain on any structure to drain into the sewage system. (Ord. 603 (part), 2004: prior code § 5-109)

13.12.100 Connections to sewer main.

All sewer systems of every business, residence or other property within the city shall be connected to the Custer City sewage treatment system. Cesspools, septic systems and drop toilets are specifically prohibited. All sewer connections shall be in accordance with the ordinances of the city and shall be approved by the public works director. (Ord. 603 (part), 2004: Ord. 349, 1990: prior code § 5-110)

13.12.110 Minimum grade.

All sewers outside of buildings must be laid in the ground of sufficient solidarity for a proper foundation and in a trench with a uniform grade of not less than one-eighth inch to the foot and one-fourth inch if practicable. (Ord. 603 (part), 2004: prior code § 5-111)

13.12.120 Materials used in sewers and connections.

The main soil pipe and its branches shall be of plastic pipe or such other pipe approved by the South Dakota State Plumbing Board. (Ord. 603 (part), 2004: prior code § 5-112)

13.12.130 Construction over sewer and water lines.

No person shall construct or erect any building or structure over or upon lateral or trunk city sewer line or water main. (Ord. 603 (part), 2004: prior code § 5-114)

13.12.140 Interference with natural drainage.

No person shall construct or alter any building or other construction over, upon or immediately adjacent to any natural drainage so as to obstruct such natural drainage except upon the written approval of the public works director who may require such provisions for the natural

drainage as may appear to be necessary. (Ord. 603 (part), 2004: prior code § 5-115)

13.12.150 Dimension of house or building drain.

All house and building drains shall be at least four inches in diameter. (Ord. 603 (part), 2004: prior code § 5-116)

13.12.160 Drains in public garages and washracks.

Every public garage or other place having a washrack used for washing vehicles shall install a standard garage drain approved by the public works director. Such drain shall be so constructed and operated as to prevent mud, sand and other debris from being washed into the city sewer system and shall be kept in proper working order. (Ord. 603 (part), 2004: prior code § 5-117)

13.12.170 Cross-connections.

No faucet, connection, valve or like appliance so constructed as to form a cross-section, directly or indirectly, between a safe drinking water supply and an unsafe or questionable water supply, shall be permitted. No licensed plumber or any other person shall make any cross-connection to the water system of the city, either outside or inside the corporate limits, with any other water system, supply from a well, cistern or any other source whatever, nor from the city water system to any drain pipe, sewer pipe or septic tank. (Ord. 603 (part), 2004: prior code § 5-118)

13.12.180 Cesspool drainage into streets and gutters prohibited.

It is unlawful for any person to allow any cesspool or septic tank to drain into any of the streets and gutters of the city. (Ord. 603 (part), 2004: prior code § 5-119)

13.12.190 Responsibility—Breakage of lines.

In the event of breakage, leakage or obstruction of any city sewer main, the city shall be responsible for the replacement or repair of the line. In the event of breakage of any sewer line running from a residence, business or any structure to the city main line, the owner or person having responsibility of the residence, business or structure, shall be responsible for its repair or replacement. If any person shall fail to promptly repair any leaky, clogged, or inadequate private sewer line or house service sewer line, or if any person shall fail to promptly and properly empty or repair any septic tank, after being notified by the city to do so, the supply of city water may be immediately shut off from the premises of all water customers on that line, and shall remain off until the necessary repairs have been made. The city shall not be liable for any damage resulting from the shutting off of the water, and no deductions shall be allowed from regular water rates during the period that the water is shut off. The water supply shall not again be turned on to the premises until all work ordered by the city has been satisfactorily completed and a fee of twenty dollars ($20.00) paid for turning the water off and on. In addition, the city may cause the service pipe to be repaired and assess the actual cost of the repair plus an administrative charge of ten percent (10%) to the property. (Ord. 603 (part), 2004: prior code § 5-121)

13.12.200 Use of sewer system effluent water.

A. All persons having a tap on the Custer City sewage effluent discharge line and having the right to withdraw water therefrom shall do so only upon notification and under the direction of the Custer City public works department. It shall be specifically prohibited that any such person shall open or operate the tap line valve or leave it open without the consent and supervision of the Custer City public works department. It is recognized that if the valve is opened or left open when the line is not charged, that damage may occur to the line or to the person or persons in the vicinity of the line or valve when the line is charged.

B. Any use of the Custer City sewer effluent water shall be for purposes as approved by the Department of Health of the state, and the customer shall be strictly responsible for any and all use, distribution and storage of the effluent water. The customer shall be strictly liable for any loss or liability occasioned by the withdrawal, use, storage or distribution of the sewer water effluent, or damage to the city system occasioned by improper withdrawal.

C. Prior to distribution of any effluent under this agreement, the customer/owner of any property served by the tap or the owner of any right to receive water from the sewer effluent system shall first execute a copy of this section acknowledging receipt of a copy of same and further agreeing to be bound by the provisions thereof. (Ord. 603 (part), 2004: Ord. 341, 1990: prior code § 5-122)

Chapter 13.16

SEWER SYSTEM USE REGULATIONS*

Sections:

Article I. Definitions
13.16.010 Definitions.

Article II. Use of Public Sewers Required
13.16.020 Unsanitary disposal of waste.
13.16.030 Unlawful discharge of sewage.
13.16.040 Privies, septic tanks, etc.
13.16.050 Sewer connections required.

Article III. Private Wastewater Disposal
13.16.060 Private disposal.
13.16.070 Permit.
13.16.080 Inspection.
13.16.090 Compliance with state recommendations.
13.16.100 Sewer connectionsCAvailability of public sewer.
13.16.110 Operation and maintenance.
13.16.120 Additional requirements.

Article IV. Sanitary Sewers, Building Sewers and Connections
13.16.130 Permits.
13.16.140 Application.
13.16.150 Costs borne by owner.
13.16.160 Separate installations.
13.16.170 Inspection of old building sewers.
13.16.180 Specifications of building sewers.
13.16.190 ElevationCLift.
13.16.200 Surface drainage.
13.16.210 Specifications for connections.
13.16.220 Inspection.
13.16.230 Excavations.

Article V. Use of the Public Sewers
13.16.240 Prohibited drainage in sanitary sewers.
13.16.250 Drainage in storm sewers.
13.16.260 Prohibited discharges in public sewers.
13.16.270 Limited discharges in public sewers.
13.16.280 Requirements for discharge of special wastes.
13.16.290 Interceptors.
13.16.300 Pretreatment or flow equalization.
13.16.310 Manholes.
13.16.320 Information needed for compliance.

13.16.330 Sampling and testing.
13.16.340 Special arrangements.

Article VI. Protection from Damage
13.16.350 DamageCDisorderly conduct.

Article VII. Powers and Authority of Inspectors
13.16.360 InspectionsCRight of entry.
13.16.370 Information concerning industrial processes.
13.16.380 Liability.
13.16.390 Easements.

Article VIII. ViolationCPenalty
13.16.400 Notice of violation.
13.16.410 Penalty.
13.16.420 Liability of violators.

* Prior ordinance history: Ord. 296.

Article I. Definitions

13.16.010 Definitions.

Unless the context specifically indicates otherwise, the meaning of terms used in this chapter shall be as follows:

"Biochemical oxygen demand (BOD)" means the quantity of oxygen utilized in the biochemical oxidation of organic matter under standard laboratory procedure in five days at twenty (20) degrees C, expressed in milligrams per liter.

"Building drain" means that part of the lowest horizontal piping of a drainage system which receives the discharge from soil, waste and other drainage pipes inside the walls of the building and conveys it to the building sewer, beginning five feet outside the inner face of the building wall.

"Building sewer" means the extension from the building drain to the public sewer or other place of disposal, also called "house connection."

"Combined sewer" means a sewer intended to receive both wastewater and storm or surface water.

"Easement" means an acquired legal right for the specific use of land owned by others.

"Floatable oil" means oil, fat or grease in a physical state such that it will separate by gravity from wastewater by treatment in an approved pretreatment facility. A wastewater shall be considered free of floatable fat if it is properly pretreated and the wastewater does not interfere with the collection system.

"Garbage" means the animal and vegetable waste resulting from the handling, preparation, cooking, and serving of foods.

"Industrial wastes" means the wastewater from industrial processes, trade or business as distinct from domestic or sanitary wastes.

"May" is permissive (see "Shall").

"Natural outlet" means any outlet, including storm sewers and combined sewer overflows, into a watercourse, pond, ditch, lake or other body of surface water or groundwater.

"Person" means any individual, firm, company, association, society, corporation or group.

"pH" means the logarithm of the reciprocal of the hydrogen-ion concentration. The concentration is the weight of hydrogen ions, in grams, per liter of solution. Neutral water, for example, has a pH value of 7 and a hydrogen-ion concentration of 10-7.

"Properly shredded garbage" means the wastes from the preparation, cooking and dispensing of food that have been shredded to such a degree that all particles will be carried freely under the flow conditions normally prevailing in public sewers, with no particle greater than one-half inch in any dimension.

"Public sewer" means a common sewer controlled by a governmental agency or public utility.

"Public works director" means the director of wastewater facilities of the city, or his authorized deputy, agent or representative.

"Sanitary sewer" means a sewer that carries liquid and water-carried wastes from residences, commercial buildings, industrial plants and institutions together with minor quantities of ground, storm and surface waters that are not admitted intentionally.

"Sewage" means the spent water of a community. The preferred term is "wastewater."

"Sewer" means a pipe or conduit that carries wastewater or drainage water.

"Shall" is mandatory (see "May").

"Slug" means any discharge of water or wastewater which in concentration of any given constituent or in quantity of flow exceeds for any period of duration longer than fifteen (15) minutes more than five times the average twenty-four (24) hour concentration or flows during normal operation and shall adversely affect the collection system and/or performance of the wastewater treatment works.

"Storm drain" (sometimes termed "storm sewer") means a drain or sewer for conveying water, groundwater, subsurface water or unpolluted water from any source.

"Suspended solids" means total suspended matter that either floats on the surface of, or is in suspension in water, wastewater, or other liquids, and that is removable by laboratory filtering as prescribed in "Standard Methods for the Examination of Water and Wastewater" and referred to as nonfilterable residue.

"Unpolluted water" means water of quality equal to or better than the effluent criteria in effect or water that would not cause violation of receiving water quality standards and would not be benefitted by discharge to the sanitary sewers and wastewater treatment facilities provided.

"Wastewater" means the spent water of a community. From the standpoint of source, it may be a combination of the liquid and water-carried wastes from residences, commercial buildings, industrial plants, and institutions, together with any groundwater, surface water and stormwater that may be present.

"Wastewater facilities" means the structures, equipment and processes required to collect, carry away and treat domestic and industrial wastes and dispose of the effluent.

"Wastewater treatment works" means an arrangement of devices and structures for treating wastewater, industrial wastes and sludge. Sometimes used as synonymous with "waste treatment plant" or "wastewater treatment plant" or "water pollution control plant."

"Watercourse" means a natural or artificial channel for the passage of water either continuously or intermittently. (Ord. 603 (part), 2004)

Article II. Use of Public Sewers Required

13.16.020 Unsanitary disposal of waste.

It is unlawful for any person to place, deposit or permit to be deposited in any unsanitary manner on public or private property within the city, or in any area under the jurisdiction of the city, any human or animal excrement, garbage or other objectionable waste. (Ord. 603 (part), 2004)

13.16.030 Unlawful discharge of sewage.

It is unlawful to discharge to any natural outlet within the city, or in any area under the jurisdiction of the city, any sewage or other polluted waters, except where suitable treatment has been provided in accordance with subsequent provisions of this chapter. (Ord. 603 (part), 2004)

13.16.040 Privies, septic tanks, etc.

Except as hereinafter provided, it is unlawful to construct or maintain any privy, privy vault, septic tank, cesspool or other facility intended or used for the disposal of wastewater without prior permission from the public works director. (Ord. 603 (part), 2004)

13.16.050 Sewer connections required.

The owner(s) of all houses, buildings or properties used for human occupancy, employment, recreation or other purposes, situated within the city and abutting on any street, alley or right-of-way in which there is now located or may in the future be located a public sanitary or combined sewer of the city, is required at the owner's expense to install suitable toilet facilities therein, and to connect such facilities directly with the proper public sewer in accordance with the provisions of this chapter, within ten (10) days after date of official notice to do so; provided, that the public sewer is within two hundred (200) feet of the property line. (Ord. 603 (part), 2004)

Article III. Private Wastewater Disposal

13.16.060 Private disposal.

Where a public sanitary or combined sewer is not available under the provisions of Section 13.16.050, the building sewer shall be connected to a private wastewater disposal system complying with the provisions of this article. (Ord. 603 (part), 2004)

13.16.070 Permit.

Before commencement of construction of a private wastewater disposal system the owner(s) shall first obtain a written permit signed by the public works director. The application for such permit shall be made on a form furnished by the city which the applicant shall supplement by any plans, specifications and other information as are deemed necessary by the public works director. A permit and inspection fee of one hundred fifty dollars ($150.00) shall be paid to the city at the time the application is filed. (Ord. 603 (part), 2004)

13.16.080 Inspection.

A permit for a private wastewater disposal system shall not become effective until the installation is completed to the satisfaction of the public works director. The public works director shall be allowed to inspect the work at any stage of construction, and, in any event, the applicant for the permit shall notify the public works director when the work is ready for final inspection, and before any underground portions are covered. The inspection shall be made within twenty-four (24) hours of the receipt of notice by the public works director. (Ord. 603 (part), 2004)

13.16.090 Compliance with state recommendations.

The type, capacities, location and layout of a private wastewater disposal system shall comply with all recommendations of the South Dakota Department of Water and Natural Resources. No permit shall be issued for any private wastewater disposal system employing subsurface soil absorption facilities where the area of the lot is less than thirty thousand (30,000) square feet. No septic tank or cesspool shall be permitted to discharge to any natural outlet. (Ord. 603 (part), 2004)

13.16.100 Sewer connectionsCAvailability of public sewer.

At such time as a public sewer becomes available to a property served by a private wastewater disposal system, as provided in Section 13.16.090, a direct connection shall be made to the public sewer within sixty (60) days in compliance with this chapter, and any septic tanks, cesspools, and similar private wastewater disposal facilities shall be cleaned of sludge and filled with suitable material. (Ord. 603 (part), 2004)

13.16.110 Operation and maintenance.

The owner(s) shall operate and maintain the private wastewater disposal facilities in a sanitary manner at all times, at no expense to the city. (Ord. 603 (part), 2004)

13.16.120 Additional requirements.

No statement contained in this article shall be construed to interfere with any additional requirements that may be imposed by the health officer. (Ord. 603 (part), 2004)

Article IV. Sanitary Sewers, Building Sewers and Connections

13.16.130 Permits.

No unauthorized person(s) shall uncover, make any connections with or opening into, use, alter or disturb any public sewer or appurtenance thereof without first obtaining a written permit from the public works director. (Ord. 603 (part), 2004)

13.16.140 Application.

There shall be three classes of building sewer permits: (a) residential service; (b) commercial service; and (c) for service to establishments producing industrial wastes. In any case the owner(s) or his agent shall make application on a special form furnished by the city. The permit application shall be supplemented by any plans, specifications or other information considered pertinent in the judgment of the public works director. A connection fee of one hundred fifty dollars ($150.00) shall be assessed for residential service. A connection fee for commercial and industrial service shall be based on monthly water consumption. A minimum connection fee shall be one hundred fifty dollars ($150.00) for the first five thousand five hundred (5,500) gallons of water consumption. An additional service connection charge of twenty-five dollars ($25.00) per one thousand (1,000) gallons of water consumption shall be assessed for each one thousand (1,000) gallons in excess of five thousand five hundred (5,500) gallons. The connection fee shall be paid to the city at the time the application is filed. (Ord. 603 (part), 2004)

13.16.150 Costs borne by owner.

All cost and expense incidental to the installation and connection of the building sewer shall be borne by the owner(s). The owner(s) shall indemnify the city from any loss or damage that may directly or indirectly be occasioned by the installation of the building sewer. (Ord. 603 (part), 2004)

13.16.160 Separate installations.

A separate and independent building sewer shall be provided for every building; except where one building stands at the rear of another on an interior lot and no private sewer is available or can be constructed to the rear building through an adjoining alley, court, yard or driveway, the building sewer from the front building may be extended to the rear building and the whole considered as one building sewer, but the city does not and will not assume any obligation or responsibility for damage caused by or resulting from any such single connection aforementioned. (Ord. 603 (part), 2004)

13.16.170 Inspection of old building sewers.

Old building sewers may be used in connection with new buildings only when they are found, on examination and test by the public works director, to meet all requirements of this chapter. (Ord. 603 (part), 2004)

13.16.180 Specifications of building sewers.

The size, slope, alignment, materials of construction of all sanitary sewers including building sewers, and the methods to be used in excavating, placing of the pipe, jointing, testing and backfilling the trench, shall all conform to the requirements of the building and plumbing codes or other applicable rules and regulations of the city. In the absence of suitable code provisions or in amplification thereof, the materials and procedures set forth in appropriate specifications of the A.S.T.M. and W.P.C.F. Manual of Practice No. 9 shall apply. (Ord. 603 (part), 2004)

13.16.190 ElevationcLift.

Whenever possible, the building sewer shall be brought to the building at an elevation below the basement floor. In all buildings in which any building drain is too low to permit gravity flow to the public sewer, sanitary sewage carried by such building drain shall be lifted by an approved means and discharged to the building sewer. (Ord. 603 (part), 2004)

13.16.200 Surface drainage.

No person(s) shall make connection of roof downspouts, foundation drains, areaway drains or other sources of surface runoff or groundwater to a building sewer or building drain which in turn is connected directly or indirectly to a public sanitary sewer unless such connection is approved by the public works director for purposes of disposal of polluted surface drainage. (Ord. 603 (part), 2004)

13.16.210 Specifications for connections.

The connection of the building sewer into the public sewer shall conform to the requirements of the building and plumbing codes or other applicable rules and regulations of the city, or the procedures set forth in appropriate specifications of the A.S.T.M. and the W.P.C.F. Manual of Practice No. 9. All such connections shall be made gastight and watertight and verified by proper testing. Any deviation from the prescribed procedures and materials must be approved by the public works director before installation. (Ord. 603 (part), 2004)

13.16.220 Inspection.

No sewer trench shall be filled or sewer pipe covered until the service sewer has been first inspected by the public works director or his designated agent. Persons making sewer connections shall give at least eight hours' notice to the public works director of the time when such service sewer shall be ready for inspection. The public works director shall inspect such sewer within a reasonable

time and if such service sewer is not properly laid or connected, the public works director shall order the same to be taken out and relaid. When such service sewer is completed, approved, and permission granted, the owner or person in charge shall be allowed to use the same. (Ord. 603 (part), 2004)

13.16.230 Excavations.

All excavations for building sewer installation shall be adequately guarded with barricades and lights so as to protect the public from hazard. Streets, sidewalks, parkways and other public property disturbed in the course of the work shall be restored in a manner satisfactory to the city. (Ord. 603 (part), 2004)

Article V. Use of the Public Sewers

13.16.240 Prohibited drainage in sanitary sewers.

No person(s) shall discharge or cause to be discharged any unpolluted waters such as stormwater, surface water, groundwater, roof runoff, subsurface drainage or cooling water to any sewer except stormwater runoff from limited areas, which stormwater may be polluted at times and may be discharged to the sanitary sewer by permission of the public works director. (Ord. 603 (part), 2004)

13.16.250 Drainage in storm sewers.

Stormwater other than that exempted under Section 13.16.240 and all other unpolluted drainage shall be discharged to such sewers as are specifically designated as storm sewers, or to a natural outlet approved by the public works director and other regulatory agencies. Unpolluted industrial cooling water or process waters may be discharged, on approval of the public works director, to a storm sewer or natural outlet. (Ord. 603 (part), 2004)

13.16.260 Prohibited discharges in public sewers.

No person(s) shall discharge or cause to be discharged any of the following described water or wastes to any public sewers:

A. Any gasoline, benzene, naphtha, fuel oil or other flammable or explosive liquid, solid or gas;

B. Any waters containing toxic or poisonous solids, liquids or gases in sufficient quantity, either singly or by interaction with other wastes, to injure or interfere with any sewage treatment process, constitute a hazard to humans or animals, create a public nuisance, or create any hazard in the receiving waters of the wastewater treatment plant;

C. Any waters or wastes having a pH lower than 5.5, or having any other corrosive property capable of causing damage or hazard to structures, equipment and personnel of the wastewater works;

D. Solid or viscous substances in quantities or of such size capable of causing obstruction to the flow in sewers, or other interference with the proper operation of the wastewater facilities such as, but not limited to, ashes, cinders, sand, mud, straw, shavings, metal, glass, rags, feathers, tar, plastics, wood, unground garbage, whole blood, paunch manure, hair and fleshings, entrails and paper dishes, cups, milk containers, etc. either whole or ground by garbage grinders. (Ord. 603 (part), 2004)

13.16.270 Limited discharges in public sewers.

The following described substances, materials, waters, or waste shall be limited in discharges to

municipal systems to concentrations or quantities which will not harm either the sewers, wastewater treatment process or equipment, will not have an adverse effect on the receiving stream, or will not otherwise endanger lives, limb, public property or constitute a nuisance. The public works director may set limitations lower than the limitations established in the regulations below if in his opinion such more severe limitations are necessary to meet the above objectives. In forming his opinion as to the acceptability, the public works director will give consideration to such factors as the quantity of subject waste in relation to flows and velocities in the sewers, materials of construction of the sewers, the wastewater treatment process employed, capacity of the wastewater treatment plant, degree of treatability of the waste in the wastewater treatment plant and other pertinent factors. The limitations or restrictions on materials or characteristics of waste or wastewaters discharged to the sanitary sewer which shall not be violated without approval of the public works director are as follows:

A. Wastewater having a temperature higher than one hundred fifty (150) degrees F (sixty-five (65) degrees C);

B. Wastewater containing more than twenty-five (25) milligrams per liter of petroleum oil, nonbiodegradable cutting oils or products of mineral oil origin;

C. Wastewater from industrial plants containing floatable oils, fat or grease;

D. Any garbage that has not been properly shredded (see Section 13.16.010). Garbage grinders may be connected to sanitary sewers from homes, hotels, institutions, restaurants, hospitals, catering establishments or similar places where garbage originates from the preparation of food in kitchens for the purpose of consumption on the premises or when served by caterers;

E. Any waters or wastes containing iron, chromium, copper, zinc and similar objectionable or toxic substances to such degree that any such material received in the composite wastewater at the wastewater treatment works exceeds the limits established by the public works director for such materials;

F. Any waters or wastes containing odor-producing substances exceeding limits which may be established by the public works director;

G. Any radioactive wastes or isotopes of such half-life or concentration as may exceed limits established by the public works director in compliance with applicable state or federal regulations;

H. Quantities of flow, concentrations or both which constitute a "slug" as defined in this chapter;

I. Waters or wastes containing substances which are not amenable to treatment or reduction by the wastewater treatment processes employed, or are amenable to treatment only to such degree that the wastewater treatment plant effluent cannot meet the requirements of other agencies having jurisdiction over discharge to the receiving waters;

J. Any water or wastes which, by interaction with other water or wastes in the public sewer system, release obnoxious gases, form suspended solids which interfere with the collection system, or create a condition deleterious to structures and treatment processes. (Ord. 603 (part), 2004)

13.16.280 Requirements for discharge of special wastes.

A. If any waters or wastes are discharged, or are proposed to be discharged to the public sewers, which waters contain the substances or possess the characteristics enumerated in Section 13.16.270, and which in the judgment of the public works director, may have a deleterious effect upon the wastewater facilities, processes, equipment or receiving waters, or which otherwise create a hazard to life or constitute a public nuisance, the public works director may:

1. Reject the wastes;
2. Require pretreatment to an acceptable condition for discharge to the public sewers;
3. Require control over the quantities and rates of discharge; and/or

4. Require payment to cover the added cost of handling and treating the wastes not covered by existing taxes or sewer charges under the provisions of Section 13.16.330.

B. When considering the above alternative, the public works director shall give consideration to the economic impact of each alternative on the discharger. If the public works director permits the pretreatment or equalization of waste flows, the design and installation of the plants and equipment shall be subject to the review and approval of the public works director or city engineer. (Ord. 603 (part), 2004)

13.16.290 Interceptors.

Grease, oil, and sand interceptors shall be provided when, in the opinion of the public works director, they are necessary for the proper handling of liquid wastes containing floatable grease in excessive amounts as specified in Section 13.16.270(C), or any flammable wastes, sand or other harmful ingredients; except that such interceptors shall not be required for private living quarters or dwelling units. All interceptors shall be of a type and capacity approved by the public works director, and shall be located as to be readily and easily accessible for cleaning and inspection. In the maintaining of these interceptors, the owner(s) shall be responsible for the proper removal and disposal by appropriate means of the captivated material and shall maintain records of the dates, and means of disposal which are subject to review by the public works director. Any removal and hauling of the collected materials not performed by owner(s) personnel must be performed by currently licensed waste disposal firms. (Ord. 603 (part), 2004)

13.16.300 Pretreatment or flow equalization.

Where pretreatment or flow-equalizing facilities are provided or required for any waters or wastes, they shall be maintained continuously in satisfactory and effective operation by the owner(s) at his expense. (Ord. 603 (part), 2004)

13.16.310 Manholes.

When required by the public works director, the owner(s) of any property serviced by a building sewer carrying industrial wastes shall install a suitable structure together with such necessary meters and other appurtenances in the building sewer to facilitate observation, sampling and measurement of the wastes. Such structures, when required, shall be accessibly and safely located, and shall be constructed in accordance with plans approved by the public works director. The structure shall be installed by the owner at his expense, and shall be maintained by him so as to be safe and accessible at all times. (Ord. 603 (part), 2004)

13.16.320 Information needed for compliance.

The public works director may require a customer of sewer services to provide information needed to determine compliance with this chapter. These requirements may include:

A. Wastewaters discharge peak rate and volume over a specified time period;

B. Chemical analyses of wastewaters;

C. Information on raw materials, processes and products affecting wastewater volume and quality;

D. Quantity and disposition of specific liquid, sludge, oil, solvent or other materials important to sewer use control;

E. A plot plan of sewers of the customer's property showing sewer and pretreatment facility location;

F. Details of wastewater pretreatment facilities;

G. Details of systems to prevent and control the losses of materials through spills to the municipal sewer. (Ord. 603 (part), 2004)

13.16.330 Sampling and testing.

All measurements, tests and analyses of the characteristics of waters and wastes to which reference is made in this chapter shall be determined in accordance with the latest edition of "Standard Methods for the Examination of Water and Wastewater," published by the American Public Health Association. Sampling methods, location, times, durations and frequencies are to be determined on an individual basis subject to approval by the public works director. (Ord. 603 (part), 2004)

13.16.340 Special arrangements.

No statement contained in this article shall be construed as preventing any special agreement or arrangement between the city and any industrial concern whereby an industrial waste of unusual strength or character may be accepted by the city for treatment. (Ord. 603 (part), 2004)

Article VI. Protection from Damage

13.16.350 DamageCDisorderly conduct.

No person(s) shall maliciously, wilfully or negligently break, damage, destroy, uncover, deface or tamper with any structure, appurtenance or equipment which is a part of the wastewater facilities. Any person(s) violating this provision shall be subject to immediate arrest under charge of disorderly conduct. (Ord. 603 (part), 2004)

Article VII. Powers and Authority of Inspectors

13.16.360 InspectionsCRight of entry.

The public works director and other duly authorized employees of the city bearing proper credentials and identification shall be permitted to enter all properties for the purposes of inspection, observation, measurement, sampling and testing pertinent to discharge to the community system in accordance with the provisions of this chapter. (Ord. 603 (part), 2004)

13.16.370 Information concerning industrial processes.

The public works director or other duly authorized employees are authorized to obtain information concerning industrial processes which have a direct bearing on the kind and source of discharge to the wastewater collection system. The industry may withhold information considered confidential. The industry must establish that the revelation to the public or the information in question might result in an advantage to competitors. (Ord. 603 (part), 2004)

13.16.380 Liability.

While performing the necessary work on private properties referred to in Section 13.16.360, the public works director or duly authorized employees of the city shall observe all safety rules applicable to the premises established by the company, and the company shall be held harmless for injury or death to the city employees, and the city shall indemnify the company against loss or damage to its property by city employees and against liability claims and demands for personal injury or property damage asserted against the company growing out of the gauging and sampling operation, except as such may be caused by negligence or failure of the company to maintain safe conditions as required in Section 13.16.310.
(Ord. 603 (part), 2004)

13.16.390 Easements.

The public works director and other duly authorized employees of the city bearing proper credentials and identification shall be permitted to enter all private properties through which the city holds a duly negotiated easement for the purposes of, but not limited to, inspection, observation, measurement, sampling, repair and maintenance of any portion of the wastewater facilities lying within the easement. All entry and subsequent work, if any, on the easement, shall be done in full accordance with the terms of the duly negotiated easement pertaining to the private property involved.
(Ord. 603 (part), 2004)

Article VIII. ViolationcPenalty

13.16.400 Notice of violation.

Any person found to be violating any provision of this chapter except Article VI shall be served by the city with written notice stating the nature of the violation and providing a reasonable time limit for the satisfactory correction thereof. The offender shall, within the period of time stated in such notice, permanently cease all violations.
(Ord. 603 (part), 2004)

13.16.410 Penalty.

Any person who shall continue any violation beyond the time limit provided for in Section 13.16.400, shall be guilty of a misdemeanor, and on conviction thereof shall be fined in the amount not exceeding one hundred dollars ($100.00) for each violation. Each day in which any such violation shall continue shall be deemed a separate offense.
(Ord. 603 (part), 2004)

13.16.420 Liability of violators.

Any person violating any of the provisions of this chapter shall become liable to the city for any expense, loss or damage occasioned the city by reason of such violation.
(Ord. 603 (part), 2004)

Chapter 13.20

SEWER SERVICE CHARGES*

Sections:

13.20.010 **Purpose.**
13.20.020 **Determining the total annual cost of operation and maintenance.**
13.20.030 **Determining each customer's wastewater contribution percentage.**
13.20.040 **Determining a surcharge system for customers with excess BOD and TSS.**
13.20.050 **Surcharge rate schedule for above-normal strength wastes.**
13.20.060 **Determining each customer's wastewater service charge.**
13.20.070 **Wastewater facilities replacement fund.**
13.20.080 **Wastewater facilities replacement fund schedule.**
13.20.090 **Payment of the customer's wastewater service charge and penalties.**
13.20.100 **Review of each customer's wastewater service charge.**
13.20.110 **Notification.**
13.20.120 **Wastes prohibited from being discharged to the wastewater treatment system.**
13.20.130 **Rates and charges.**
13.20.140 **Wastewater customers outside the city limits.**

* Prior history: Prior code [1] 5-120 and Ords. 297, 315, 330, 342, 337, 394, 424, 435, 486, 517 and 575.

13.20.010 Purpose.

The purpose of this chapter shall be to generate sufficient revenue to pay all costs for the capital costs and operation and maintenance of the complete wastewater system. The costs shall be distributed to all customers of the system in proportion to each customer's contribution to the total loading of the treatment works. Factors such as strength (BOD and TSS), volume and delivery flow rate characteristics shall be considered and included as the basis for the customer's maintenance costs to each customer or customer class.
(Ord. 603 (part), 2004)

13.20.020 Determining the total annual cost of operation and maintenance.

The public works director, or its city engineer, shall determine the total annual costs of operation and maintenance of the wastewater system which are necessary to maintain the capacity and performance, during the service life of the treatment works, for which such works were designed and constructed. The total annual costs of operation and maintenance shall include, but need not be limited to, labor, repairs, equipment replacement, maintenance, necessary modifications, power, sampling, laboratory tests and a reasonable contingency fund.
(Ord. 603 (part), 2004)

13.20.030 Determining each customer's wastewater contribution percentage.

A. The public works director, or its city engineer, shall determine for each customer or customer class the average daily volume of wastewater discharged to the wastewater system, which shall then be divided by the average daily volume of all wastewater discharged to the wastewater system to determine such customer's volume contribution percentage. The amount used as the total average daily volume of wastewater shall exclude infiltration and inflow. The public works director, or its city engineer, shall determine for each customer or customer class the average daily poundage of five-day twenty (20) degree centigrade biochemical oxygen demand (BOD) discharged to the wastewater system which shall then be divided by the average daily poundage of all five-day BOD discharged to the wastewater system to determine such customer's BOD contribution percentage.

B. The public works director, or its city engineer, shall determine for each customer or customer class the average daily total suspended solids (TSS) poundage discharged to the wastewater system which shall then be divided by the average daily poundage of all TSS discharged to the wastewater system, to determine such customer's TSS contribution percentage. The volume contribution percentage, BOD contribution percentage and TSS contribution percentage for each customer or customer class shall be multiplied by the annual operation and maintenance costs for wastewater treatment of the total volume flow, total five-day twenty (20) degree centigrade BOD and total TSS, respectively. (Ord. 603 (part), 2004)

13.20.040 Determining a surcharge system for customers with excess BOD and TSS.

The public works director, or its city engineer, will assess a surcharge rate for all nonresidential customers discharging wastes with BOD and TSS strengths greater than the average residential customer. Such customers will be assessed a surcharge sufficient to cover the cost of treating their above-normal strength wastes. Normal strength wastes are considered to be two hundred fifty (250) ppm BOD and two hundred fifty (250) ppm TSS. The surcharge rate structure for such above-normal strength waste dischargers is attached in Section 13.20.050. (Ord. 603 (part), 2004)

13.20.050 Surcharge rate schedule for above-normal strength wastes.

The public works director, or its city engineer, has determined that the average total suspended solids (TSS) and five-day biochemical oxygen demand (BOD) daily loadings for the average residential customer are two hundred fifty (250) ppm BOD and two hundred fifty (250) ppm TSS. The public works director, or its city engineer, has assessed a surcharge rate for all nonresidential customers discharging wastes with BOD and TSS strengths greater than the average residential customer. The surcharge will be sufficient to cover the costs of treating such customers' above-normal strength wastes. Such customers will pay an additional service charge of twenty-five cents ($0.25) per one thousand (1,000) gallons for each twenty-five (25) ppm over two hundred fifty (250) ppm of BOD and twenty-five cents ($0.25) per one thousand (1,000) gallons for each twenty-five (25) ppm over two hundred fifty (250) ppm TSS. (Ord. 603 (part), 2004)

13.20.060 Determining each customer's wastewater service charge.

Each nonresidential customer's wastewater treatment cost contributions as determined in Sections 13.20.030 and 13.20.040 shall be added together to determine such customer's annual wastewater service charge. Residential customers may be considered to be one class of customer and an equitable service charge may be determined for each customer based on an estimate of the total water consumption of this class of customer. (Ord. 603 (part), 2004)

13.20.070 Wastewater facilities replacement fund.

A reserve fund called the wastewater facilities replacement fund is established within the wastewater utility fund for the purpose of providing sufficient funds to be expended for obtaining and installing equipment, accessories and appurtenances during the useful life (twenty (20) years) of the wastewater treatment facilities necessary to maintain the capacity and performance for which such facilities are designed and constructed (see Section 13.20.080). (Ord. 603 (part), 2004)

13.20.080 Wastewater facilities replacement fund schedule.

The reserve fund called the wastewater facilities replacement fund established within the wastewater utility fund as an interest-bearing account shall be funded by a deposit of no less than fifty-eight thousand three hundred sixty dollars ($58,360.00) per year obtained from the wastewater utility fund at the end of each fiscal year. (Ord. 603 (part), 2004)

13.20.090 Payment of the customer's wastewater service charge and penalties.

Each customer shall read his water meter between the first and eleventh day of each month and shall pay his monthly wastewater service charge in conjunction with his total monthly utility billing. The city shall assess a five-dollar ($5.00) penalty if the payment is not received by the city on or before the eleventh day of each month. Each customer shall be notified by mail of the delinquent account along with the attachment of penalty. After notification and if the delinquent account is not paid within ten (10) days, the city shall disconnect water service to the customer and/or stop wastewater service to the property. (Ord. 603 (part), 2004)

13.20.100 Review of each customer's wastewater service charge.

The city shall review the total annual cost of operation and maintenance as well as each customer's wastewater contribution percentage not less often than every two years and will revise the water system charge as necessary to assure equity of the service charge system established in this chapter and to assure that sufficient funds are obtained to adequately operate and maintain the wastewater treatment works. (Ord. 603 (part), 2004)

13.20.110 Notification.

The wastewater treatment services budget shall be published annually in the city's legal newspaper to serve as notice to each customer of the costs associated with wastewater collection and treatment in determination of customer charges. (Ord. 603 (part), 2004)

13.20.120 Wastes prohibited from being discharged to the wastewater treatment system.

A. The discharge of any waters containing toxic or poisonous solids, liquids or gases in sufficient quantity, either singly, or by interaction with other wastes, to contaminate the sludge of any municipal systems, or to injure or interfere with any sewage treatment process, constitute a hazard to

humans or animals, create a public nuisance, or create any hazard in or have an adverse effect on the waters receiving any discharge from the treatment works is prohibited.

B. Each customer which discharges any toxic pollutants which cause an increase in the cost of managing the effluent or the sludge of the wastewater treatment works shall pay for such increased costs.

(Ord. 603 (part), 2004)

13.20.130 Rates and charges.

There shall be charged by the city, effective immediately upon passage and publication of the ordinance codified in this section as provided by law, a charge for wastewater services (operation and maintenance) to persons, associations of individuals, partnerships, corporations or firms based upon the usage of water. The rates shall be as follows:

A. 1. Operation and Maintenance C Residential (Single-Family).

Gallons Used	Wastewater Charge
2,000 (minimum)	$15.75

On amounts of water used over two thousand (2,000) gallons, add one dollar and twenty-five cents ($1.25) per thousand gallons used to the wastewater charge.

B. 1. Operation and Maintenance C Commercial and Multifamily.

Gallons Used	Wastewater Charge
2,000 (minimum)	$18.50

On amounts of water used over two thousand (2,000) gallons, add five dollars ($5.00) per thousand gallon used to the wastewater charge.

(Ord. 669, 2009: Ord. 603 (part), 2004)

13.20.140 Wastewater customers outside the city limits.

All customers of wastewater services provided by Custer City, outside the corporate limits, shall be governed by all rules, regulations and ordinances in effect within the city concerning the same, and shall be charged the rate of one and one-half times the rate for in-town customers in the same customer class category as determined by the city council.

(Ord. 603 (part), 2004)

Chapter 13.24

WATER AND SEWER RATE CLASSIFICATIONS*

Sections:

13.24.010	**Classifications.**
13.24.020	**Meter installation fees.**
13.24.030	**Application for reclassification when.**
13.24.040	**Compliance.**
13.24.050	**Abandonment of service.**
13.24.060	**Service reduction.**

* Prior ordinance history: Ords. 378 and 575.

13.24.010 Classifications.

A. Residential customers are considered to be one class of customer. For the purpose of this section, a residential customer means any single independent family, and irrespective of whether living in a one-family residence, mobilehome, or any other type of residence, if such residence is served by an independent connection to the municipal water and wastewater system of the city.

B. Commercial, multiple-family residence, and mobilehome parks are considered to be one class of customer. For the purpose of this section, a multiple-family residence includes duplexes, four-plexes, apartment buildings, and any structure or series of structures that contain multiple residential units that collectively discharge their domestic waste into a single, independent connection to the municipal wastewater system of the city. For the purposes of this section, a mobilehome park is two or more mobilehomes that collectively discharge their domestic waste into a single, independent connection to the municipal sewer system. For the purpose of this section, all other customers not specifically designated in subsections A and B of this section will be classed as commercial.

C. All customers of the municipal wastewater system whose origin is within the corporate boundaries of the city and whose water supply did not originate from the city's municipal water system shall be charged a fee for the use of the municipal wastewater system. This fee shall be based on the proportion of the flow that the customer generates in relation to the total flow of the system. The fee shall be this percentage applied to the current year's total operation and maintenance budget for the city wastewater treatment and collection system.

D. Out-of-Town Customers. The water and wastewater service charge for all out-of-town customers of the municipal water and wastewater system shall be one and one-half times the rate for in-town customers in the same customer class categories. (Ord. 603 (part), 2004)

13.24.020 Meter installation fees.

To have a meter installed for residential water and sewer there shall be a connection fee of one hundred fifty dollars ($150.00). To have a meter installed for commercial water and sewer there shall be a minimum connection fee of one hundred fifty dollars ($150.00) for the first five thousand five hundred (5,500) gallons of water consumption which increases at twenty-five dollars ($25.00) per one thousand (1,000) gallons of water consumption. It is intended that this comport with Chapter 13.16. (Ord. 603 (part), 2004)

13.24.030 Application for reclassification when.

Customers, upon notification of benefit, who are affected by this chapter may apply for reclassification after the effective date of the ordinance codified in this chapter. (Ord. 603 (part), 2004)

13.24.040 Compliance.

All future construction of any structures which would fall into the categories set forth in Section 13.24.010 shall be required to comply with the mandates of this chapter. Existing structures which fall within the categories set forth in Section 13.24.010 of this chapter shall be required to comply with the mandates of this chapter. (Ord. 603 (part), 2004)

13.24.050 Abandonment of service.

Abandonment of service requires the system to be shut off in conjunction with Section 13.04.270 (notice for discontinuance required) with the written statement (form) being filed on the property with the Custer County register of deeds office. When this procedure is completed, the minimum monthly utility charge will be waived. At the time the property owner decides to have the utility lines reactivated, there will be the normal and customary charges as associated with Section 13.04.090 (tap and connection charges). (Ord. 603 (part), 2004)

13.24.060 Service reduction.

All residential and commercial customers whose home is not occupied for a period of thirty (30) consecutive days or more shall present a written request for water shutoff in order to have their water and wastewater bill reduced during the period. In order to reinstate water and wastewater service, the customer shall present a written request therefore, at which time the rate reduction will terminate. The following reduced rates will apply for residential customers: water charge — five dollars ($5.00); bond charge — two dollars ($2.00); wastewater charge — six dollars ($6.00). The following reduced rates will apply for commercial customers: water charge — six dollars ($6.00); bond charge — two dollars ($2.00); wastewater charge — eight dollars ($8.00). (Ord. 603 (part), 2004)

ORDINANCE NO. 697

An Ordinance entitled An Ordinance Amending Title 13 Public Services, Chapter 13.20, Section 13.20.130 A & B of the City of Custer City Municipal Code and amending, replacing, and superseding all prior ordinances or amendments, by which amending and superseding said Ordinance as follows, to wit:

13.20.130 Rates and charges.

There shall be charged by the city, effective for the October 2011 billing upon passage and publication of the ordinance codified in this chapter as provided by law, a charge for wastewater services (operation and maintenance) to persons, associations of individuals, partnerships, corporations or firms based upon the usage of water. The rates shall be as follows:

A. 1. Operation and Maintenance—Residential (Single Family).

Gallons Used	Wastewater Charge
2,000 (minimum)	$16.70

On amounts of water used over two thousand (2,000) gallons, add one dollar and eighty-four cents ($1.84) per thousand gallons used to the wastewater charge.

B. 1. Operation and Maintenance—Commercial and Multi Family.

Gallons Used	Wastewater Charge
2,000 (minimum)	$19.61

On amounts of water used over two thousand (2,000) gallons, add five dollars and thirty cents ($5.30) per thousand gallons used to the wastewater charge.

NOW BE IT ORDAINED that all ordinances or parts thereof in conflict with this ordinance are hereby repealed. Should any section or part of this ordinance be determined to be invalid, the same shall not invalidate the remaining section(s) of this Ordinance.

Dated this 19th day of September, 2011

City of Custer City

Attest: Laurie Woodward, Finance Officer

Gary Lipp, Mayor

(SEAL) CITY OF CUSTER CORPORATE SEAL CUSTER, SOUTH DAKOTA

First Reading: September 6th, 2011
Seconding Reading: September 19th, 2011
Publication: September 28th, 2011

Vote:
Schleining: Yes
Heinrich: Yes
Lampert: Yes
Fischer: Yes
Herman: Yes
Hattervig: Yes

ORDINANCE NO. 698

An Ordinance entitled An Ordinance Amending Title 13 Public Services, Chapter 13.08. Section 13.08.010 A & B of the City of Custer City Municipal Code and amending, replacing, and superseding all prior ordinances or amendments, by which amending and superseding said Ordinance as follows, to wit:

13.08.010 Rates and charges.

There shall be charged by the city, effective for the October 2011 billing upon passage and publication of the ordinance codified in this chapter as provided by law, a charge for water services (operation and maintenance) to persons, associations of individuals, partnerships, corporations or firms based upon the usage of water. The rates shall be as follows:

A. 1. Operation and Maintenance—Residential (Single Family).

Gallons Used	Water Charge
2,000 (minimum)	$ 7.90

On amounts of water used over two thousand (2,000) gallons, add five dollars and twenty-five cents ($5.25) per thousand gallons used to the water charge.

B. 1. Operation and Maintenance—Commercial and Multi Family.

Gallons Used	Water Charge
2,000 (minimum)	$19.18

On amounts of water used over two thousand (2,000) gallons, add six dollars and forty-six cents ($6.46) per thousand gallons used to the water charge.

NOW BE IT ORDAINED that all ordinances or parts thereof in conflict with this ordinance are hereby repealed. Should any section or part of this ordinance be determined to be invalid, the same shall not invalidate the remaining section(s) of this Ordinance.

Dated this 19th day of September, 2011

City of Custer City

Attest: Laurie Woodward
Laurie Woodward, Finance Officer

Gary Lipp
Gary Lipp, Mayor

CITY OF CUSTER CORPORATE SEAL CUSTER, SOUTH DAKOTA

(SEAL)

First Reading: September 6th, 2011
Seconding Reading: September 19th, 2011
Publication: September 28th, 2011

Vote:
Schleining: Yes
Heinrich: Yes
Lampert: Yes
Fischer: Yes
Herman: Yes
Hattervig: Yes

Appendix D

Flood Plain Maps

FLOOD HAZARD INFORMATION

SEE FIS REPORT FOR DETAILED LEGEND AND INDEX MAP FOR FIRM PANEL LAYOUT

SPECIAL FLOOD HAZARD AREAS	Without Base Flood Elevation (BFE) *Zone A, V, A99* With BFE or Depth *Zone AE, AO, AH, VE, AR*
	Regulatory Floodway
OTHER AREAS OF FLOOD HAZARD	0.2% Annual Chance Flood Hazard, Areas of 1% annual chance flood with average depth less than one foot or with drainage areas of less than one square mile *Zone X*
	Future Conditions 1% Annual Chance Flood Hazard *Zone X*
	Area with Reduced Flood Risk due to Levee See Notes. *Zone X*
	Area with Flood Risk due to Levee *Zone D*
OTHER AREAS	NO SCREEN Area of Minimal Flood Hazard *Zone X*
	Effective LOMRs
	Area of Undetermined Flood Hazard *Zone D*
GENERAL STRUCTURES	Channel, Culvert, or Storm Sewer
	Levee, Dike, or Floodwall
OTHER FEATURES	20.2 17.5 Cross Sections with 1% Annual Chance Water Surface Elevation
	Coastal Transect
	Coastal Transect Baseline
	Profile Baseline
	Hydrographic Feature
	Base Flood Elevation Line (BFE)
	Limit of Study
	Jurisdiction Boundary

NOTES TO USERS

For information and questions about this Flood Insurance Rate Map (FIRM), available products associated with this FIRM, including historic versions, the current map date for each FIRM panel, how to order products, or the National Flood Insurance Program (NFIP) in general, please call the FEMA Map Information eXchange at 1-877-FEMA-MAP (1-877-336-2627) or visit the FEMA Flood Map Service Center website at http://msc.fema.gov. Available products may include previously issued Letters of Map Change, a Flood Insurance Study Report, and/or digital versions of this map. Many of these products can beordered or obtained directly from the website.

Communities annexing land on adjacent FIRM panels must obtain a current copy of the adjacent panel as well as the current FIRM Index. These may be ordered directly from the Flood Map Service Center at the number listed above.

For community and countywide map dates refer to the Flood Insurance Study Report for this jurisdiction.

To determine if flood insurance is available in this community, contact your Insurance agent or call the National Flood Insurance Program at 1-800-638-6620.

Basemap information shown on this FIRM was provided in digital format by USDA, Farm Service Agency (FSA). This information was derived from NAIP, dated April 11, 2018.

This map was exported from FEMA's National Flood Hazard Layer (NFHL) on **9/20/2019 11:25:51 AM** and does not reflect changes or amendments subsequent to this date and time. The NFHL and effective information may change or become superseded by new data over time. For additional information, please see the Flood Hazard Mapping Updates Overview Fact Sheet at https://www.fema.gov/media-library/assets/documents/118418

This map complies with FEMA's standards for the use of digital flood maps if it is not void as described below. The basemap shown complies with FEMA's basemap accuracy standards

This map image is void if the one or more of the following map elements do not appear: basemap imagery, flood zone labels, legend, scale bar, map creation date, community identifiers, FIRM panel number, and FIRM effective date.

SCALE

N

Map Projection:
GCS. Geodetic Reference System 1980;
Vertical Datum: NAVD88
For information about the specific vertical datum for elevation features, datum conversions, or vertical monuments used to create this map please see the Flood Insurance Study(FIS) Report for your community at https://msc.fema.gov

1 inch = 500 feet **1:6,000**

0 250 500 1,000 1,500 2,000 Feet

0 50 100 200 300 400 Meters

National Flood Insurance Program

NATIONAL FLOOD INSURANCE PROGRAM

FLOOD INSURANCE RATE MAP

CUSTER COUNTY, SOUTH DAKOTA AND INCORPORATED AREAS

PANEL **118** OF **1050**

Panel Contains:

COMMUNITY	NUMBER	PANEL
CUSTER COUNTY SOUTH DAKOTA	460018	0118

MAP NUMBER
4603300118F
EFFECTIVE DATE
01/06/2012

FEMA's National Flood Hazard Layer (NFHL) Viewer
with Web AppBuilder for ArcGIS
Find address or place
FLOODWAY
Zone AE
5295.3 FEET
5220 FEET
5214 FEET
5193 FEET
5186 FEET
Zone AE
Zone A
CUSTER COUNTY
460018
46033C0118F
eff. 1/6/2012
AREA OF MINIMAL FLOOD HAZARD
Zone X
46033C0125F
eff. 1/6/2012
0.2mi
POWERED BY esri

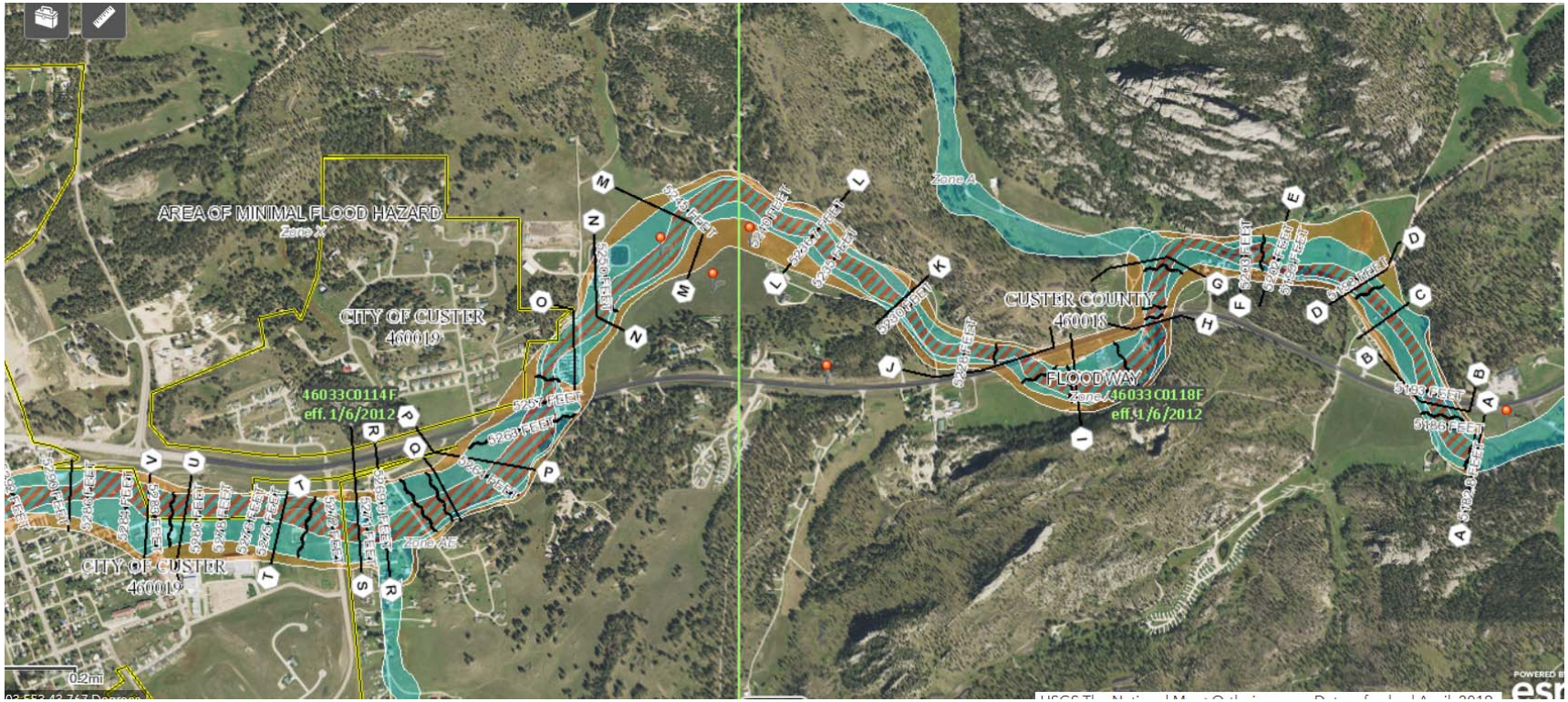
AREA OF MINIMAL FLOOD HAZARD
Zone X
CITY OF CUSTER
460019
46033C0114F
eff. 1/6/2012
Zone AE
CITY OF CUSTER
460019
Zone A
CUSTER COUNTY
460018
FLOOD WAY
Zone A
46033C0118F
eff. 1/6/2012
0.2mi

Appendix E

Wetland Map

U.S. Fish and Wildlife Service

National Wetlands Inventory

Wetlands Map - General Area

September 20, 2019

Wetlands

- Estuarine and Marine Deepwater
- Estuarine and Marine Wetland
- Freshwater Emergent Wetland
- Freshwater Forested/Shrub Wetland
- Freshwater Pond
- Lake
- Other
- Riverine

This map is for general reference only. The US Fish and Wildlife Service is not responsible for the accuracy or currentness of the base data shown on this map. All wetlands related data should be used in accordance with the layer metadata found on the Wetlands Mapper web site.

National Wetlands Inventory (NWI)
This page was produced by the NWI mapper

Appendix E

Surface Water Discharge Permit

Permit No.: SD0023281

SOUTH DAKOTA DEPARTMENT OF ENVIRONMENT AND NATURAL RESOURCES

Surface Water Discharge Permit
Authorizing Discharge
Under The South Dakota Surface Water Discharge System

In compliance with the provisions of the South Dakota Water Pollution Control Act and the Administrative Rules of South Dakota, Article 74:52,

the City of Custer

is authorized under this permit to discharge to

Flynn Creek

from its wastewater treatment facility located about one mile northeast of the city in the Northeast ¼ of the Southwest ¼ of Section 19, Township 3 South, Range 5 East, in Custer County, South Dakota (Latitude 43.773306º, Longitude -103.567528º) and the polishing ponds located ½ mile north of the primary treatment facility in the South ½ of Section 18 and the North ½ of Section 19, all in Township 3 South, Range 5 East, in Custer County, South Dakota (Latitude 43.782611º, Longitude -103.569889º), in accordance with discharge points, effluent limits, monitoring requirements, and other conditions set forth herein. Authorization is limited to those outfalls specifically listed in the permit. The permittee must comply with all conditions of this permit. Any permit noncompliance constitutes a violation of the South Dakota Water Pollution Control Act and is grounds for enforcement action; for permit termination, revocation and reissuance, or modification; or for denial of a permit renewal application.

This permit shall become effective April 1, 2013.

This permit and the authorization to discharge shall expire at midnight, March 31, 2018.

Signed this 22nd day of March, 2013.

Authorized Permitting Official
Steven M. Pirner
Secretary
Department of Environment and Natural Resources

Amended: July 15, 2015
Effective: July 15, 2015

TABLE OF CONTENTS

1.0 DEFINITIONS 4

2.0 PERMIT COVERAGE 7

2.1 PERMIT TRANSFERS 7
2.2 REOPENER PROVISIONS 7
2.3 DUTY TO REAPPLY 8
2.4 CONTINUATION OF THE EXPIRED PERMIT 8
2.5 PROPERTY RIGHTS 8
2.6 PERMIT ACTIONS 8
2.7 SEVERABILITY 9

3.0 EFFLUENT LIMITS 10

3.1 DESCRIPTION OF DISCHARGE POINTS 10
3.2 EMERGENCY DISCHARGES AND SANITARY SEWER OVERFLOWS 10
3.3 PROPER OPERATION AND MAINTENANCE 11
3.4 EFFLUENT LIMITS – *OUTFALL 001A* 12
3.5 EFFLUENT LIMITS – *OUTFALL 002R* 12
3.6 INSPECTION REQUIREMENTS 13
3.7 BEST MANAGEMENT PRACTICES PLAN – LAND APPLICATION 14
3.8 CAPACITY, MANAGEMENT, OPERATION, AND MAINTENANCE 15

4.0 MONITORING, RECORD KEEPING, & REPORTING REQUIREMENTS 17

4.1 SELF-MONITORING REQUIREMENTS – *OUTFALL 001A* 17
4.2 LAND APPLICATION SELF-MONITORING REQUIREMENTS – *OUTFALL 002R* 18
4.3 UNAUTHORIZED RELEASE MONITORING REQUIREMENTS (002N AND 003N) 20
4.4 MONITORING PROCEDURES 21
4.5 ADDITIONAL MONITORING BY THE PERMITTEE 21
4.6 REPORTING OF MONITORING RESULTS - OUTFALL 001A AND 002R 21
4.7 REPORTING OF MONITORING RESULTS-OUTFALL 002N AND 003N (NO DISCHARGE OUTFALLS) 22
4.8 EFFLUENT VIOLATIONS, EMERGENCY RELEASES, SANITARY SEWER OVERFLOWS, UPSETS, AND UNAUTHORIZED RELEASES REPORTING REQUIREMENTS 22
4.9 BYPASS REPORTING 24
4.10 RECORDS CONTENTS 24
4.11 SIGNATORY REQUIREMENTS 24
4.12 RETENTION OF RECORDS 25
4.13 AVAILABILITY OF REPORTS 25
4.14 DUTY TO PROVIDE INFORMATION 26
4.15 PLANNED CHANGES 26

5.0 COMPLIANCE REQUIREMENTS 27

5.1 DUTY TO COMPLY 27
5.2 DUTY TO MITIGATE 27

5.3 NEED TO HALT OR REDUCE ACTIVITY NOT A DEFENSE 27
5.4 UPSET CONDITIONS 27
5.5 PENALTIES FOR VIOLATIONS OF PERMIT CONDITIONS 27
5.6 PENALTIES FOR FALSIFICATION OF REPORTS 28
5.7 OIL AND HAZARDOUS SUBSTANCE LIABILITY 28

6.0 INDUSTRIAL WASTES 29

6.1 INDUSTRIAL USERS 29
6.2 PROHIBITED DISCHARGES 29
6.3 CATEGORICAL STANDARDS 30
6.4 LEGAL ACTION 30

7.0 ADDITIONAL PERMIT CONDITIONS 31

7.1 INSPECTION AND ENTRY 31
7.2 REMOVED SUBSTANCES 31

APPENDIX A – Emergency, SSO, Upset, or Unauthorized Release Reporting Form

1.0 DEFINITIONS

"30-day (and monthly) Average" means the arithmetic average of all samples collected during a consecutive 30-day period or calendar month, whichever is applicable. The calendar month shall be used for purposes of reporting self-monitoring data on discharge monitoring report forms.

"7-day (and weekly) Average" means the arithmetic mean of all samples collected during a consecutive 7-day period or calendar week, whichever is applicable. The calendar week that begins on Sunday and ends on Saturday, shall be used for purposes of reporting self-monitoring data on discharge monitoring report forms. Weekly averages shall be calculated for all calendar weeks with Saturdays in the month. If a calendar week overlaps two months (i.e., the Sunday is in one month and the Saturday in the following month), the weekly average calculated for that calendar week shall be included in the data for the month that contains the Saturday.

"ARSD" means the Administrative Rules of South Dakota.

An **"Authorized Release"** is a discharge from a permitted outfall that meets all permit conditions and effluent limits.

"Biosolids" means any sewage sludge or material derived from sludge that can be beneficially used. Beneficial use includes, but is not limited to, land application to agricultural land, forest land, a reclamation site or sale or give away to the public for home lawn and garden use.

"BOD_5" means Five-Day Biochemical Oxygen Demand. BOD is a measurement of the amount of oxygen utilized by the decomposition of organic material, over a specified time period (usually 5 days) in a sample.

A **"Bypass"** is the intentional diversion of waste streams from any portion of a collection system or treatment facility other than the permitted outfall(s). Bypasses do not include releases from the sanitary sewer collection system (see **"Sanitary Sewer Overflow"**) or emergency releases from the treatment facility (see **"Emergency Discharge"**). If a bypass results in a release of wastewater, it shall be sampled and reported as either a sanitary sewer overflow from the collection system or an emergency discharge from the treatment facility.

"Composite Samples" shall be flow proportioned. The composite sample shall contain at least four samples collected over the compositing period. Unless otherwise specified, the time between the collection of the first sample and the last sample shall not be less than six hours nor more than 24 hours. Acceptable methods for preparation of composite samples are as follows:

1. Constant time interval between samples, sample volume proportional to flow rate at time of sampling;

2. Constant time interval between samples, sample volume proportional to total flow (volume) since last sample. For the first sample, the flow rate at the time the sample was collected may be used;

3. Constant sample volume, time interval between samples proportional to flow (i.e., sample taken every "X" gallons of flow); and,

4. Continuous collection of sample, with sample collection rate proportional to flow rate.

"Daily Maximum (Daily Max.)" is the maximum value allowable in any single sample or instantaneous measurement.

"DMR" means Discharge Monitoring Report, EPA Form 3320-1, or a report filed electronically by an EPA-approved electronic system, which is used to report sampling data.

An **"Emergency Discharge"** is a discharge from the treatment or containment system through a release structure or over or through retention dikes or walls. An emergency discharge is distinguished from a sanitary sewer overflow in that a sanitary sewer overflow discharges wastewater prior to reaching the treatment or containment system. An emergency discharge must meet the conditions of Section 3.2.1.

"EPA" or **"US EPA"** means United States Environmental Protection Agency.

A **"Grab Sample,"** for monitoring requirements, is a single "dip and take" sample collected at a representative point in the discharge stream.

An **"Industrial User"** is a non-domestic source of pollutants discharged into a publicly owned treatment works.

An **"Instantaneous Measurement,"** for monitoring requirements, is a single reading, observation, or measurement either taken at the facility or within 15 minutes of the sample.

"MGD" is the measure of flow rate meaning million gallons per day.

"pH" is the measure of the hydrogen ion concentration of water or wastewater; expressed as the negative log of the hydrogen ion concentration. A pH of 7 is neutral. A pH less than 7 is acidic, and a pH greater than 7 is basic.

A **"Publicly-Owned Treatment Works"** or **"POTW"** is any device or system used in the treatment, including recycling and reclamation, of municipal sewage or industrial waste of a liquid nature that is owned by the state or a municipality. This term includes sewers, pipes, or other conveyances only if they convey wastewater to a publicly owned treatment works providing treatment.

A **"Sanitary Sewer Overflow"** or **"SSO"** is the intentional or unintentional discharge of untreated sewage from the sanitary sewer collection system, including sewer lines, manholes, lift stations, etc.

"SDDENR" means the South Dakota Department of Environment and Natural Resources.

"Secretary" means the Secretary of the South Dakota Department of Environment and Natural Resources, or authorized representative.

"Severe Property Damage" is substantial physical damage to property, damage to the treatment facilities that causes them to become inoperable, or substantial and permanent loss of natural resources that can reasonably be expected to occur in the absence of a bypass. Severe property damage does not mean economic loss caused by delays in production.

"Sewage Sludge" is any solid, semi-solid, or liquid residue removed during the treatment of municipal wastewater or domestic sewage. Sewage sludge includes but is not limited to solids removed during primary, secondary or advanced wastewater treatment, scum, septage, portable toilet pumpings, and sewage sludge products. Sewage sludge does not include grit, screenings, or ash generated during the incineration of sewage sludge.

A **"Significant Industrial User"** is defined as an industrial user discharging to a publicly-owned treatment works (POTW) that satisfies any of the following:

1. Is subject to Categorical Pretreatment Standards under ARSD Chapter 74:52:10 (a.b.r. 40 CFR 403.6 and 40 CFR chapter I, subchapter N);

2. Discharge an average of 25,000 gallons per day or more of process wastewater to the publicly owned treatment works (excluding sanitary, non-contact cooling water, and boiler blowdown wastewater);

3. Contributes a process wastewater that makes up 5 percent or more of the average dry weather hydraulic or organic capacity of the publicly owned treatment works; or,

4. Is designated as such by the Secretary on the basis that the Industrial User has a reasonable potential for adversely affecting the publicly owned treatment works or for violating any pretreatment standard or requirement.

"TSS" means Total Suspended Solids. TSS is a measure of the filterable solids present in a sample.

An **"Unauthorized release"** is a discharge from the treatment or containment system through a release structure or over or through retention dikes or walls that does not meet all permit conditions or effluent limits. An unauthorized release is distinguished from an emergency discharge in that a permittee must document the discharge meets the conditions of Section 3.2.1. to be considered an emergency discharge.

"Upset" means an exceptional incident in which there is unintentional and temporary noncompliance with technology-based permit effluent limits because of factors beyond the reasonable control of the permittee. An upset does not include noncompliance to the extent caused by operational error, improperly designed treatment facilities, inadequate treatment facilities, lack of preventive maintenance, or careless or improper operation.

2.0 PERMIT COVERAGE

2.1 Permit Transfers

1. Coverage under this permit may be transferred to a new permittee if:

   a. The signatory authority notifies the Secretary at least 30 days in advance of the proposed transfer date;

   b. The notice includes a written agreement between the existing and new permittee containing a specific date for transfer of permit responsibility, coverage, and liability between them; and

   c. The new permittee submits a Certification of Applicant form certifying the new permittee is qualified to perform the obligations of a permit holder in accordance with South Dakota Codified Law 1-40-27.

2. The Secretary will notify the existing and new permittee of his or her intent to transfer, modify, or revoke and reissue the permit based on the information received and other permit information.

2.2 Reopener Provisions

This permit may be reopened and modified (following proper administrative procedures) to include the appropriate effluent limits (and compliance schedules, if necessary), or other appropriate requirements if one or more of the following events occurs:

1. Water Quality Standards: The water quality standards of the receiving waters applicable to this permit are modified in such a manner as to require different effluent limits than contained in this permit;

2. Water Quality Management Plan: A revision to the current water quality management plan is approved and adopted that calls for different effluent limits than contained in this permit;

3. Effluent Guidelines: Effluent limit guidelines are promulgated or revised for point sources covered by this permit;

4. Total Maximum Daily Load: Additional controls in the permit are necessary to implement a total maximum daily load approved by the Secretary and/or EPA;

5. Noncompliance: The discharger is a significant contributor of pollution to waters of the state, presents a health hazard, or is in noncompliance with the conditions of the permit;

6. Whole Effluent Toxicity: Whole effluent toxicity is detected in the discharge;

7. Pretreatment Program: The permittee is required to develop and implement a pretreatment program, regulating indirect discharges of wastewater into its publicly owned treatment works; or

8. Other Changes: Other conditions or standards change so that the discharge no longer qualifies for this permit, such as the permittee being designated as a major discharger, changes in necessary influent or effluent pollutant monitoring, additional industrial pretreatment requirements become applicable to the permittee, or other items.

2.3 Duty to Reapply

If the permittee wishes to continue an activity regulated by this permit after its expiration date, the permittee must apply for and obtain coverage under a new permit. The permit application must be submitted at least 180 days before the expiration date of this permit. Periodically during the term of this permit and at the time of reissuance, the permittee may be requested to reaffirm its eligibility to discharge under this permit.

2.4 Continuation of the Expired Permit

An expired permit continues in full force and effect until a new permit is issued. If the permittee wishes to continue an activity regulated by this permit after its expiration date, the permittee must submit an application at least 180 days before the expiration date of the permit.

2.5 Property Rights

1. The Secretary's issuance of this permit, adoption of design criteria, and approval of plans and specifications, does not convey any property rights of any sort, any exclusive privileges, any authorization to damage, injure or use any private property, any authority to invade personal rights, any authority to violate federal, state or local laws or regulations, or any taking, condemnation or use of eminent domain against any property owned by third parties.

2. The State does not warrant that the permittee's compliance with this permit, design criteria, approved plans and specifications, and operation under this permit, will not cause damage, injury or use of private property, an invasion of personal rights, or violation of federal, state or local laws or regulations. The permittee is solely and severably liable for all damage, injury or use of private property, invasion of personal rights, infringement of federal, state or local laws and regulations, or taking or condemnation of property owned by third parties, that may result from actions taken under the permit.

2.6 Permit Actions

The Secretary may modify, revoke and reissue, or terminate coverage under this permit for cause, including failure to comply with any provision of this permit or any condition imposed by the Secretary upon granting coverage under this permit. The filing of a request by the permittee for a permit modification, revocation and reissuance, or termination, or a notification of planned changes or anticipated noncompliance, does not stay any permit condition.

2.7 Severability

The provisions of this permit are severable, and if any provision of this permit, or the application of any provision of this permit to any circumstance, is held invalid, the application of such provision to other circumstances, and the remainder of this permit, shall not be affected thereby.

3.0 EFFLUENT LIMITS

3.1 Description of Discharge Points

The authorization to discharge provided under this permit is limited to those outfalls specifically designated below as discharge locations. Discharges at any location not authorized under this permit is a violation of the South Dakota Water Pollution Control Act and could subject the person(s) responsible for such discharge to penalties under Section 34A-2-75 of the Act. Knowingly discharging from an unauthorized location or failing to report an unauthorized discharge within a reasonable time from the permittee first learning of an unauthorized discharge could subject the permittee to penalties as provided under the South Dakota Water Pollution Control Act.

Outfall Number	Description of Discharge Points
001A	Any discharge from Cell 4 pumped through a forcemain into Flynn Creek (Latitude 43.682669º, Longitude -103.538375º). Sampling shall occur from a valve in the forcemain at the primary treatment facility.
002N	Any discharge to waters of the state from Cell 4 to the golf course land application water holding pond, from the land application water holding pond, or runoff from the golf course during land application (Latitude 43.755417º, Longitude -103.623861º). **No discharge shall occur from Outfall 002.**
002R	Land application of wastewater from the golf course holding pond (Latitude 43.755417º, Longitude -103.623861º). **Land application of wastewater is not considered a discharge.**
003N	Any discharge from Cell 4 to French Creek (Latitude 43.777778º, Longitude -103.566667º). **No discharge shall occur from Outfall 003.**

3.2 Emergency Discharges and Sanitary Sewer Overflows

1. Discharges of wastewater are prohibited from locations other than the discharge points described in **Section 3.1– Description of Discharge Points** and the Secretary may take enforcement action against a permittee, unless the discharge or sanitary sewer overflow is an emergency and meets each of the following conditions:

    a. The emergency discharge or sanitary sewer overflow was unavoidable to prevent loss of life, threat to public health, personal injury, or severe property damage;

    b. There were no feasible alternatives to the emergency discharge or sanitary sewer overflow, such as the use of auxiliary treatment facilities, retention

of untreated wastes, or maintenance during normal periods of equipment downtime. This condition is not satisfied if adequate back-up equipment should have been installed in the exercise of reasonable engineering judgment or proper operation and maintenance to prevent an emergency release that occurred during normal periods of equipment downtime or preventive maintenance; and,

c. The permittee submitted notices as required under **Section 4.8 – Emergency Releases, Sanitary Sewer Overflows, Upsets, and Unauthorized Releases Reporting Requirements**

2. If an emergency discharge, sanitary sewer overflow, or other discharge occurs or is expected to occur, the permittee shall take the appropriate measures to minimize the discharge of pollutants. Such measures may include the closing of facilities that contribute wastewater to the sewer system until the discharge is terminated.

3. Any emergency discharge or sanitary sewer overflow that meets the conditions of paragraph 1 above shall be reported as soon as possible (but in no case more than 24 hours after becoming aware of the circumstances) in accordance with the provisions in **Section 4.8 – Emergency Releases, Sanitary Sewer Overflows, Upsets, and Unauthorized Releases Reporting Requirements**. The report shall be made to the Secretary at (605) 773-3351 during regular business hours (8:00 a.m. – 5:00 p.m. Central Time) or to the South Dakota Emergency Management at (605) 773-3231 any other time.

3.3 Proper Operation and Maintenance

The permittee shall at all times properly operate and maintain all facilities and treatment and control systems that are installed or used by the permittee to achieve compliance with the conditions of this permit or other conditions required by the Secretary upon issuance.

1. This may include the maintenance of freeboard levels of lagoons or holding ponds.

2. Proper operation and maintenance may also include adequate laboratory controls and appropriate quality assurance procedures. This provision requires the operation of back-up or auxiliary facilities or similar systems that are installed by a permittee only when the operation is necessary to achieve compliance with the conditions of the permit.

3.4 Effluent Limits – *Outfall 001A*

Effective immediately and lasting through the life of the permit, the quality of effluent discharged by the facility shall, as a minimum, meet the limits as set forth below:

Effluent Characteristic	Effluent Limit	
	30-Day Average[1]	7-Day Average[1]
Five-Day Biochemical Oxygen Demand (BOD_5), mg/L	30	45
Total Suspended Solids (TSS), mg/L	30	45
The pH of the discharge shall not be less than 6.0 standard units or greater than 9.0 standard units in any sample.		
No chemicals, such as chlorine, shall be used without prior written permission.		

[1] See Definitions.

3.5 Effluent Limits – *Outfall 002R*

Effective immediately and lasting through the life of this permit, the quality of effluent discharged by the facility shall, as a minimum, meet the limits as set forth below:

Effluent Characteristic	Effluent Limit		
	30-Day Average[1]	7-Day Average[1]	Daily Maximum[1]
Five-Day Biochemical Oxygen Demand (BOD_5), mg/L	30	45	N/A
Total Suspended Solids (TSS), mg/L	30	45	N/A
Fecal Coliform, no./100 mL[2]	20	N/A	100
The pH of the discharge shall not be less than 6.0 standard units or greater than 9.0 standard units in any sample.			
The application flow rate at the land application site shall be controlled so as to prevent any surface runoff of the effluent. The flow rate should also ensure that there is no standing water on the land application site.			
To prevent ground saturation and runoff, no application is permitted during periods of heavy or prolonged rainfall, snow cover or when the ground is frozen.			
The land application equipment shall, to the extent feasible, be installed in such a manner as to minimize wind drift of the effluent and formation of aerosols.			
Appropriate warning signs shall be posted on the land application site to inform the public of the nature of the water.			

[1] See Definitions.

[2] Fecal Coliform organisms shall not exceed a concentration of 20 per 100 milliliters as a geometric mean based on a minimum of 5 samples obtained during separate 24-hour periods for any calendar month. They shall not exceed 100 per 100 milliliters in any one sample.

3.6 Inspection Requirements

The permittee shall inspect its wastewater treatment facility, outfall structures, and lift stations regularly as outlined below. The inspections shall be conducted to determine if a discharge is occurring, has occurred since the previous inspection, and/or if a discharge is likely to occur before the next inspection. In addition, the inspections shall be performed to determine if proper operation and maintenance procedures are being undertaken at the wastewater treatment facility and lift stations. The permittee shall maintain a notebook recording information obtained during the inspection.

1. **Facility Inspections.** The permittee shall inspect mechanical portions of its wastewater treatment facility at least **three times per week** and inspect the polishing ponds and outfall at least **monthly.** At a minimum, the notebook shall include the following:

    a. Date and time of the inspection;

    b. Name of the inspector(s);

    c. The facility's discharge status;

    d. The measured amount of freeboard or water depth in each pond;

    e. Identification of operational problems and/or maintenance problems;

    f. Recommendations, as appropriate, to remedy identified problems;

    g. A brief description of any actions taken with regard to problems identified; and,

    h. Other information, as appropriate.

2. **Lift Station Inspections.** The permittee shall inspect each lift station on at least a **weekly** basis. The inspections shall be performed to determine if proper operation and maintenance procedures are being undertaken and verify no sanitary sewer overflows are occurring or have occurred. During any sanitary overflow, the lift stations shall be inspected on a **daily** basis. At a minimum, the notebook shall include the following for each lift station:

    a. Date and time of the inspection;

    b. Name of the inspector(s);

    c. Whether a sanitary sewer overflow is occurring or has occurred;

d. Identification of operational problems and/or maintenance problems;

e. Cleaning of screenings, if applicable;

f. Testing of alarms, if applicable;

g. Hour meter readings;

h. Recommendations, as appropriate, to remedy identified problems;

i. A brief description of any actions taken with regard to problems identified; and,

j. Other information, as appropriate.

3. **Land Application Inspections.** The permittee shall inspect the land application system **daily** while land applying. The land application site shall be inspected **weekly** while land application is occurring. At a minimum, the notebook shall include the following:

   a. Date and time of the inspection;

   b. Name of the inspector(s);

   c. The facility's land application status, including any runoff from the application site or discharge from the piping equipment;

   d. Identification of operational problems and/or maintenance problems;

   e. Recommendations, as appropriate, to remedy identified problems;

   f. A brief description of any actions taken with regard to problems identified; and,

   g. Other information, as appropriate.

4. The permittee shall maintain the notebook(s) for the facility, land application system, and each lift station in accordance with proper record-keeping procedures and shall make the notebook(s) available for inspection, upon request, by the Secretary or the US EPA.

3.7 Best Management Practices Plan – Land Application

By **July 1, 2013**, the city shall submit to SDDENR for review and approval a Best Management Practices Plan for land application. The goal of the plan shall be to ensure protection of surface and ground water supplies and to protect human health. The plan shall be prepared in accordance with the *South Dakota Recommended Design Criteria manual for Wastewater Collection and Treatment Facilities* and shall include the following information.

1. A legal description and ownership of the land application sites (including Section, Township, Range). If the city does not own the land application site, written permission must be obtained from the land owner;

2. Measures and Controls:

a. Measures to minimize human contact;

b. Preventative maintenance;

c. Recordkeeping and internal reporting procedures;

d. Sediment and erosion control; and

e. Management of runoff.

3. Determination of the land application rate based on the soil type, nutrient requirements, and the land application system.

4. An analysis should be conducted to determine the soil/water compatibility.

The department shall be kept informed of the land application sites and the proposed time frame of use, and shall be notified at least 30 days in advance of any changes. The plan must be updated to include all site changes and address nutrient application rates.

3.8 Capacity, Management, Operation, and Maintenance

In the event that the Secretary notifies the permittee of the need to develop a capacity, management, operation, and maintenance program in order to address, reduce, or eliminate the frequency of sanitary sewer overflows or emergency discharges, the permittee shall develop and submit the program to the Secretary. The program shall, at a minimum, address the following areas:

1. Sewer management program: This program includes personnel organizational structure, training, communication information systems, noncompliance notification program, and other appropriate items;

2. Collection system operation program: This program includes operational budgeting, monitoring, safety, emergency preparedness and response, pump stations, operational recordkeeping, and other appropriate items;

3. Collection system maintenance program: This program includes maintenance budgeting, planned and unplanned maintenance; sewer cleaning; maintenance recordkeeping, parts and equipment inventory, and other appropriate items; and

4. Sewer system capacity evaluation: The capacity evaluation includes the following:

   a. System inventory (sewer locations, sizes, slopes, materials, age, condition, etc.);

   b. Identification of problem areas (overflows, surcharged lines, basement backups, etc.);

   c. Capacity evaluation of problem areas (utilizing flow and precipitation records, infiltration and inflow investigation, manhole and pipe inspections and televising, smoke and dye testing, and building inspections); and

d. Sewer rehabilitation recommendations.

5. Timelines: This program shall identify timelines and specific dates for completing any identified changes or improvements.

6. SDDENR Approval: The permittee shall submit the program to SDDENR for approval. Upon approval, the permittee shall implement the program.

4.0 MONITORING, RECORD KEEPING, & REPORTING REQUIREMENTS

4.1 Self-Monitoring Requirements – *Outfall 001A*

Effective immediately and lasting through life of the permit, all authorized discharges shall be monitored for the following parameters at the frequency and with the type of measurement indicated. The permittee shall report the monitoring results in accordance with **Section 4.6 – Reporting of Monitoring Results.**

Effluent Characteristic	Frequency	Reporting Values[1]	Sample Type[1]
Total Flow, million gallons	Monthly	Monthly Total	Calculate
Flow Rate, MGD	Weekly[2]	Daily Maximum; 30-Day Average	Instantaneous
pH, standard units	Weekly[2]	Daily Minimum; Daily Maximum	Instantaneous[3,4]
Water Temperature, °C	Weekly[2]	Daily Maximum; 30-Day Average	Instantaneous[4,5]
Five-Day Biochemical Oxygen Demand (BOD_5), mg/L	Weekly[2]	Max 7-Day Average; 30-Day Average	Grab
Total Suspended Solids (TSS), mg/L	Weekly[2]	Max 7-Day Average; 30-Day Average	Grab
Ammonia-Nitrogen (as N), mg/L	Weekly[2]	Daily Maximum; 30-Day Average	Grab[4]
E. coli (May 1- September 30), no./100 mL	Weekly[2,6]	Daily Maximum; 30-Day Geo Mean	Grab

[1] See Definitions.

[2] A minimum of one sample shall be taken during each week that a discharge is occurring. Sampling shall be conducted at the sampling tap on the intake line to the discharge pump. Samples are to be taken while the pump is operating. All samples collected during the 7-day or 30-day period are to be used in determining the averages. If only one sample is collected during the period, it must be considered the same as the average for that period. The permittee always has the option of collecting additional sample if appropriate.

[3] The pH shall be taken within 15 minutes of sample collection with a pH meter. The pH meter must be capable of simultaneous calibration to two points on the pH scale that bracket the expected pH and are approximately three standard units apart. The pH meter must read to 0.01 standard units and be equipped with temperature compensation adjustment. Readings shall be reported to the nearest 0.1 standard units.

[4] The pH and temperature of the effluent shall be determined when ammonia samples are collected.

[5] The water temperature of the effluent shall be taken as a field measurement. Measurement shall be made with a mercury-filled, or dial type thermometer, or a thermistor. Readings shall be reported to the nearest whole degree Celsius.

[6] If a minimum of five samples are collected in a calendar month, all of the samples collected are to be used in determining the geometric mean. Samples are to be collected at the same time as BOD_5, TSS, etc. The daily maximum shall be reported as long as at least one sample is taken. ***This sampling protocol for* E. coli *only applies if the discharge occurs between May 1 and September 30.***

4.2 Land Application Self-Monitoring Requirements – *Outfall 002R*

All land application of wastewater shall be monitored for the following parameters at the frequency and with the type of measurement indicated. The permittee shall report the land application monitoring results in accordance with **Section 4.6– Reporting of Monitoring Results.**

Effluent Characteristic	Frequency	Reporting Values[1]	Sample Type[1]
Flow Rate, MGD	Weekly	Daily Maximum; 30-Day Average	Instantaneous
Fecal Coliform, no./l00 mL	Weekly[2,3]	Daily Maximum; 30-Day Geo Mean	Grab
Five-Day Biochemical Oxygen Demand (BOD_5), mg/L	Weekly[2]	Max 7-Day Average; 30-Day Average	Grab
Total Suspended Solids (TSS), mg/L	Weekly[2]	Max 7-Day Average; 30-Day Average	Grab
Days Land Applied, days	Monthly	Monthly Total	Calculate
Total Amount Land Applied (Total Flow), million gallons	Monthly	Monthly Total[4]	Calculate
pH, standard units	Monthly[2]	Daily Minimum; Daily Maximum	Instantaneous[5,6]
Water Temperature, ºC	Monthly[2]	Daily Maximum; 30-Day Average	Instantaneous[5,7]
Sodium Absorption Ratio (SAR)[8]	Monthly[2]	Daily Maximum; 30-Day Average	Grab

Effluent Characteristic	Frequency	Reporting Values[1]	Sample Type[1]
Conductivity, µmhos/cm	Monthly[2]	Daily Maximum; 30-Day Average	Grab
Total Kjeldahl Nitrogen, mg/L	Monthly[2]	Daily Maximum; 30-Day Average	Grab
Ammonia-Nitrogen (as N), mg/L	Monthly[2]	Daily Maximum; 30-Day Average	Grab[5]
Total Nitrates (as N), mg/L	Monthly[2]	Daily Maximum; 30-Day Average	Grab
Total Nitrites (as N), mg/L	Monthly[2]	Daily Maximum; 30-Day Average	Grab
Total Sulfates, mg/L	Monthly[2]	Daily Maximum; 30-Day Average	Grab
Total Chlorides, mg/L	Monthly[2]	Daily Maximum; 30-Day Average	Grab
Total Phosphorous (as P), mg/L	Monthly[2]	Daily Maximum; 30-Day Average	Grab
Total Dissolved Solids (TDS), mg/L	Monthly[2]	Daily Maximum; 30-Day Average	Grab

[1] See Definitions.

[2] A minimum of one sample shall be taken at the frequency stated when land application is occurring. Samples shall be representative of the land applied water. All samples collected during the 7-day or 30-day period are to be used in determining the averages. If only one sample is collected during the period, it must be considered the same as the average for that period. The permittee always has the option of collecting additional sample if appropriate.

[3] If a minimum of five samples are collected in a calendar month, all of the samples collected are to be used in determining the geometric mean. Samples are to be collected at the same time as BOD_5, TSS, etc. Additional samples are to be collected during any other separate 24-hour periods. If less than five samples are taken during any calendar month, the maximum limit still applies.

[4] The date and time of the start and termination of each land application event shall also be reported in the comments section of the DMR.

[5] The pH and temperature of the effluent shall be determined when ammonia samples are collected.

[6] The pH shall be taken within 15 minutes of sample collection with a pH meter. The pH meter must be capable of simultaneous calibration to two points on the pH scale that bracket the expected pH and are approximately three standard units apart. The pH meter must read to 0.01

standard units and be equipped with temperature compensation adjustment. Readings shall be reported to the nearest 0.1 standard units.

[7] The water temperature of the effluent shall be taken as a field measurement. Measurement shall be made with a mercury-filled, or dial type thermometer, or a thermistor. Readings shall be reported to the nearest whole degree Celsius.

[8] The sodium absorption ratio is calculated using the Gapon equation: $SAR = \frac{Na}{\sqrt{\frac{(Ca + Mg)}{2}}}$

4.3 Unauthorized Release Monitoring Requirements (002N and 003N)

Promptly upon discovery of a discharge from Outfall 002N (land application runoff), 003N, emergency discharge, or sanitary sewer overflow, the discharge shall be monitored for the following parameters at the frequency and with the type of measurement indicated. Knowingly discharging or failing to report a discharge within a reasonable time from the permittee first learning of a discharge could subject the permittee to penalties as provided under the South Dakota Water Pollution Control Act.

The permittee shall report the monitoring results in accordance with **Section 4.7 – Emergency Releases, Sanitary Sewer Overflows, Upsets, and Unauthorized Releases Reporting Requirements.**

Effluent Characteristic	Frequency	Reporting Value	Sample Type[1]
Total Flow, million gallons	Each Discharge[2]	Event Total	Calculated
Duration of Discharge, days	Each Discharge[2]	Event Total	Calculated
Flow Rate, gallons per day	Daily[3]	Actual Value	Instantaneous
pH, standard units	Daily[3]	Actual Value	Instantaneous[4,5]
Water Temperature, ºC	Daily[3]	Actual Value	Instantaneous[4,6]
Total Suspended Solids (TSS), mg/L	Daily[3]	Actual Value	Grab
Five-Day Biochemical Oxygen Demand (BOD_5), mg/L	Daily[3]	Actual Value	Grab
Ammonia as N, mg/L	Daily[3]	Actual Value	Grab[4]
Escherichia coli (*E. coli*), no./l00 mL	Daily[3]	Actual Value	Grab

[1] See Definitions.

[2] The permittee shall report the date and time of the start and termination of each discharge, along with the total number of gallons discharged during the entire discharge event.

[3] The permittee shall take a minimum of one sample per day during any emergency release, bypass, sanitary sewer overflow, or other discharge unless SDDENR authorizes an alternative sampling schedule.

[4] The pH and temperature of the effluent shall be determined when ammonia samples are collected.

[5] The pH shall be taken within 15 minutes of sample collection with a pH meter. The pH meter must be capable of simultaneous calibration to two points on the pH scale that bracket the expected pH and are approximately three standard units apart. The pH meter must read to 0.01 standard units and be equipped with temperature compensation adjustment. Readings shall be reported to the nearest 0.1 standard units.

[6] The water temperature of the effluent shall be taken as a field measurement. Measurement shall be made with a mercury-filled, or dial type thermometer, or a thermistor. Readings shall be reported to the nearest whole degree Fahrenheit.

4.4 Monitoring Procedures

1. Effluent samples taken in compliance with the monitoring requirements established under this permit shall be collected prior to discharge into the receiving waters. Samples and measurements shall be representative of the volume and nature of the monitored discharge.

2. Monitoring shall be conducted according to test procedures approved under ARSD Section 74:52:03:06 (a.b.r. 40 CFR, Part 136), unless other test procedures have been specified in this permit or approved by the Secretary.

4.5 Additional Monitoring by the Permittee

If the permittee monitors any pollutant more frequently than required by this permit at the designated points, using test procedures approved under ARSD Section 74:52:03:06 (a.b.r. 40 CFR 136) or as specified in this permit, the results of this monitoring shall be used in determining compliance with this permit and reported to SDDENR.

4.6 Reporting of Monitoring Results - Outfall 001A and 002R

1. Effluent monitoring results obtained during the previous three months shall be summarized for each month, reported on separate Discharge Monitoring Report Forms (as defined in **Section 1.0 - Definitions**), and submitted to SDDENR on at least a **quarterly** basis. These must be submitted no later than the 28th day of the month following the completed reporting period. If no discharge occurs during the reporting period, “no discharge” shall be reported. Legible copies of these, and all other reports required herein, shall be signed and certified in accordance with **Section 4.11 – Signatory Requirements** and submitted to the Secretary at the following address:

South Dakota Department of Environment and Natural Resources
Surface Water Quality Program
PMB 2020
Joe Foss Building
523 East Capitol
Pierre, SD 57501-3182

2. In accordance with SDCL 1-40-39, the Secretary is authorized to accept a document with an electronic signature. SDDENR shall provide for the authenticity of each electronic signature by adhering to any standards established by the South Dakota Bureau of Information and Telecommunications pursuant to SDCL 53-12-47 and 53-12-50 or any other standards established by rules promulgated pursuant to SDCL Chapter 1-26.

4.7 Reporting of Monitoring Results-Outfall 002N and 003N (No Discharge Outfalls)

1. Effluent monitoring results obtained from Outfall 002 (runoff of land applied wastewater), Outfall 003, or other unauthorized discharges during the previous month shall be summarized, reported on a copy of the Discharge Reporting Form (found in Appendix A), and submitted to SDDENR on a **monthly** basis. These must be postmarked no later than the 28th day of the month following the completed reporting period. Legible copies of these, and all other reports required herein, shall be signed and certified in accordance with **Section 4.11 – Signatory Requirements** and submitted to the Secretary at the following address:

South Dakota Department of Environment and Natural Resources
Surface Water Quality Program
PMB 2020
Joe Foss Building
523 East Capitol
Pierre, SD 57501-3182

2. In accordance with SDCL 1-40-39, the Secretary is authorized to accept a document with an electronic signature. SDDENR shall provide for the authenticity of each electronic signature by adhering to any standards established by the South Dakota Bureau of Information and Telecommunications pursuant to SDCL 53-12-47 and 53-12-50 or any other standards established by rules promulgated pursuant to SDCL Chapter 1-26.

4.8 Effluent Violations, Emergency Releases, Sanitary Sewer Overflows, Upsets, and Unauthorized Releases Reporting Requirements

1. The permittee shall report any emergency related to this permit or permitted facility that may endanger health or the environment as soon as possible, but no later than 24 hours after becoming aware of the circumstances as follows:

   a. During regular business hours (8:00 a.m. - 5:00 p.m. Central Time), the report shall be made at (605) 773-3351.

   b. Outside of normal business hours, the permittee shall contact the South Dakota Emergency Management at (605) 773-3231.

2. Effluent violations, sanitary sewer overflows, emergency discharges, upsets, and other unauthorized releases that do not meet the conditions of Paragraph 1 above shall be reported to the Secretary within 24 hours from the time the permittee becomes aware of the circumstances as follows:

   a. During regular business hours (8:00 a.m. - 5:00 p.m. Central Time), the report shall be made at (605) 773-3351.

   b. Outside of normal business hours, the permittee shall leave a message at 1-800-GET-DENR (1-800-438-3367).

3. Anticipated releases shall be reported to the Secretary in advance, if possible.

4. The Secretary may require the permittee to notify the general public or downstream users that could be or will be impacted by the emergency discharge.

   a. In making the decision to require public notification, the Secretary will consider the potential impacts as a result of the discharge, the downstream beneficial uses (such as drinking water or recreation), and the potential for public contact.

   b. If required by the Secretary, the permittee shall notify the public and/or downstream users as soon as possible, but in no case more than 24 hours after the discharge begins.

5. In addition to verbal notification, the permittee shall submit a written report of the circumstances regarding the effluent violation, sanitary sewer overflow, emergency discharge, or other unauthorized release to the Secretary. Sanitary sewer overflow, emergency discharge, or other unauthorized release shall be reported using the Emergency, SSO, Upset, or Unauthorized Release Reporting Form in Appendix A.

   a. Reports shall be submitted in accordance with **Section 4.7 – Reporting of Monitoring Results-Outfall 002N and 003N (No Discharge Outfalls)**

   b. The written submission shall contain:

      i. A description of the event and its cause;
      ii. The period of the event, including exact dates and times;
      iii. Where the wastewater was discharged;
      iv. The estimated time the event is expected to continue if it has not been corrected;
      v. Any adverse effects, such as fish kills;
      vi. If public notification was required, describe how the public was notified of the discharge; and
      vii. Steps taken or planned to reduce, eliminate, and prevent reoccurrence of the event.

   c. The written report shall be submitted by the 28th day of the following month. The Secretary may require a written report to be submitted sooner or may require additional information if the discharge has the potential to impact human health or the environment.

4.9 Bypass Reporting

1. The permittee may allow anticipated bypasses to occur that do not result in a discharge and will not result in a violation of the effluent limits, but only if for essential maintenance to ensure efficient operation.

2. The permittee shall submit notice of bypass as follows:

   a. **Anticipated bypass.** If the permittee knows in advance of the need for a bypass, it shall submit prior notice to the Secretary at least 10 days before the date of the bypass.

   b. **Unanticipated bypass**. The permittee shall submit notice of an unanticipated bypass to the secretary at (605) 773-3351 by the first workday (8:00 a.m. – 5:00 p.m. Central Time) following the day the permittee became aware of the circumstances.

4.10 Records Contents

Records of monitoring information shall include:

1. The date, exact place, and time of sampling or measurements;

2. The initials or names of the individuals who performed the sampling or measurements;

3. The dates analyses were performed;

4. The time analyses were initiated;

5. The initials or names of individuals who performed the analyses;

6. References and written procedures, when available, for the analytical techniques or methods used; and,

7. The results of such analyses, including the bench sheets, instrument readouts, computer disks or tapes, etc., used to determine these results.

4.11 Signatory Requirements

1. All permit applications, reports or information submitted to the Secretary shall be signed and certified by either a principal executive officer or ranking elected official.

2. All reports required by the permit and other information requested by the Secretary shall be signed by a person described in paragraph 1 of this section or by a duly authorized representative of that person. A person is a duly authorized representative only if:

   a. The authorization is made in writing by a person described above and submitted to the Secretary; and,

   b. The authorization specifies either an individual or a position having responsibility for the overall operation of the regulated facility, such as the

position of superintendent or equivalent responsibility, or an individual or position having overall responsibility for environmental matters. A duly authorized representative may be either a named individual or any individual occupying a named position.

3. If an authorization under paragraph 2 a. above is no longer accurate because a different individual or position has responsibility for the overall operation of the facility, a new authorization must be submitted to the Secretary.

4. Any person signing a document under this section shall include the following certification:

> *I certify under penalty of law that this document and all attachments were prepared under my direction or supervision in accordance with a system designed to assure that qualified personnel properly gather and evaluate the information submitted. Based on my inquiry of the person or persons who manage the system, or those persons directly responsible for gathering the information, the information submitted is, to the best of my knowledge and belief, true, accurate, and complete. I am aware that there are significant penalties for submitting false information, including the possibility of fine and imprisonment for knowing violations.*

4.12 Retention of Records

1. The permittee shall retain records of all monitoring information and other data required by this permit. This includes:

   a. Data collected on site;

   b. Copies of all Discharge Monitoring Report Forms;

   c. A copy of the permit;

   d. All calibration and maintenance records;

   e. All original strip chart recordings for continuous monitoring instrumentation;

   f. Copies of all other reports required by this permit; and

   g. Records of all data used to complete the application for this permit.

2. This information must be retained for a period of at least **three years** from the date of the sample, measurement, report, or application. This period may be extended by request of the Secretary at any time. Data collected on site, copies of Discharge Monitoring Reports, and a copy of this permit must be maintained on site during the duration of the permitted activity.

4.13 Availability of Reports

Except for data determined to be confidential under ARSD Section 74:52:02:17, all reports prepared in accordance with the terms of this permit shall be available for public

inspection at the office of SDDENR. The name and address of the permittee, permit applications, permits, and effluent data shall not be considered confidential.

4.14 Duty to Provide Information

1. The permittee shall furnish to the Secretary, within a reasonable time, any information the Secretary may request to determine whether cause exists for modifying, revoking and reissuing, or terminating this permit, or to determine compliance with this permit. The permittee shall also furnish to the Secretary, upon request, copies of records required to be kept by this permit.

2. If the permittee becomes aware that it failed to submit any relevant facts in a permit application form, or submitted incorrect information in a permit application form or any report to the Secretary, it shall promptly submit such facts or information.

4.15 Planned Changes

The permittee shall give notice to the Secretary as soon as possible of any planned physical alterations or additions to the permitted facility. Notice is required only when the alteration or addition could significantly change the nature or increase the quantity of pollutant discharged, or could result in noncompliance with permit conditions. This notification also applies to pollutants that are not subject to effluent limits or other notification requirements in this permit.

5.0 COMPLIANCE REQUIREMENTS

5.1 Duty to Comply

The permittee shall comply with all conditions of this permit. Any permit noncompliance constitutes a violation of the South Dakota Water Pollution Control Act and the federal Clean Water Act and is grounds for enforcement action; for permit termination, revocation and reissuance, or modification; or for denial of a permit renewal application (a violation of a condition of this permit is subject to SDCL Section 34A-2-75).

5.2 Duty to Mitigate

The permittee shall take all reasonable steps to minimize or prevent any wastewater discharge and/or sludge disposal or reuse in violation of this permit that has a reasonable likelihood of adversely affecting human health or the environment.

5.3 Need to Halt or Reduce Activity Not a Defense

It shall not be a defense for a permittee in an enforcement action that it would have been necessary to halt or reduce the permitted activity in order to maintain compliance with the conditions of this permit.

5.4 Upset Conditions

1. An upset constitutes an affirmative defense to an action brought for noncompliance with technology based permit effluent limits if the requirements of Paragraph 2 of this section are met. No determination made during administrative review of claims that noncompliance was caused by upset, and before an action for noncompliance, is final administrative action subject to judicial review (i.e., Permittees will have the opportunity for a judicial determination on any claim of upset only in an enforcement action brought for noncompliance with technology-based permit effluent limits).

2. Conditions necessary for a demonstration of upset. A permittee who wishes to establish the affirmative defense of upset shall demonstrate, through properly signed, contemporaneous operating logs, or other relevant evidence that:

   a. An upset occurred and the permittee can identify the cause(s) of the upset;

   b. The permitted facility was at the time being properly operated;

   c. The permittee submitted notice of the upset as required under **Section 4.8– Emergency Releases, Sanitary Sewer Overflows, Upsets, and Unauthorized Releases Reporting Requirements**; and,

   d. The permittee complied with mitigation measures required under **Section 5.2 – Duty to Mitigate.**

3. Burden of proof. In any enforcement proceeding, the permittee seeking to establish the occurrence of an upset has the burden of proof.

5.5 Penalties for Violations of Permit Conditions

Any person who violates a permit condition is in violation of the provisions of SDCL 34A-2-36, and is subject to penalties under SDCL 34A-2-75. In addition to a jail sentence

authorized by SDCL 22-6-2, such violators are subject to a criminal fine not to exceed ten thousand dollars per day of violation. The violator is also subject to a civil penalty not to exceed ten thousand dollars per day of violation, or for damages to the environment of this state. Except as provided in **Section 5.4 – Upset Conditions**, nothing in this permit shall be construed to relieve the permittee of the civil or criminal penalties for noncompliance.

5.6 Penalties for Falsification of Reports

1. Any person who knowingly makes any false statement, representation, or certification in any record or other document submitted or required to be maintained under this permit, including monitoring reports or reports of compliance or noncompliance, is in violation of the provisions of SDCL 34A-2-77, and is subject to penalties under SDCL 34A-2-75.

2. Any person who falsifies, tampers with, or knowingly renders inaccurate any monitoring device or method required to be maintained under this permit is in violation of the provisions of SDCL 34A-2-77, and is subject to penalties under SDCL 34A-2-75.

3. In addition to a jail sentence authorized by SDCL 22-6-2, such violators are subject to a criminal fine not to exceed ten thousand dollars per day of violation. The violator is also subject to a civil penalty not to exceed ten thousand dollars per day of violation, or for damages to the environment of this state.

5.7 Oil and Hazardous Substance Liability

Nothing in this permit shall be construed to preclude SDDENR from taking any legal action or relieve the permittee from any responsibilities, liabilities, or penalties to that the permittee is or may be subject under section 311 of the Federal Clean Water Act.

6.0 INDUSTRIAL WASTES

6.1 Industrial Users

1. The Permittee has the responsibility to protect the Publicly-Owned Treatment Works (POTW) from pollutants which would inhibit, interfere, or otherwise be incompatible with operation of the treatment works including interference with the use or disposal of municipal sludge.

2. During the life of the permit, the permittee shall conduct an industrial waste survey to identify the character and volume of pollutants from each significant industrial user, as well as documenting production data.

3. The permittee shall notify the Secretary of any new introductions by new or existing industrial users or any substantial change in pollutants from any industrial user. Such notice must contain the information described in paragraph 1 above and be submitted to the Secretary no later than 60 days following the introduction or change.

4. The permittee shall provide adequate notice to the Secretary of any substantial change in the volume or character of pollutants being introduced into the POTW by any other industrial users. For the purposes of this section, adequate notice shall include information on:

   a. The quality and quantity of effluent to be introduced into the POTW; and,

   b. Any anticipated impact of the change on the quantity or quality of effluent to be discharged from the POTW.

6.2 Prohibited Discharges

1. Under no circumstances shall the permittee allow the introduction of the following pollutants to the POTW from any source of nondomestic discharge:

   a. Pollutants that create a fire or explosion hazard in the publicly owned treatment works, including but not limited to waste streams with a closed cup flashpoint of less than 60 degrees Celsius (140 degrees Fahrenheit) using the test methods specified in ARSD Section 74:28:22:01 (a.b.r. 40 CFR 261.21);

   b. Pollutants that will cause corrosive structural damage to the Publicly owned treatment works (POTW), but in no case discharges with pH lower than 5.0 standard units nor greater than 12.5 standard units;

   c. Solid or viscous pollutants in amounts that will cause obstruction to the flow in the POTW, or other interference with the operation of the POTW;

   d. Any pollutant, including oxygen demanding pollutants (e.g., BOD), released in a discharge at a flow rate and/or pollutant concentration that will cause interference with the POTW;

   e. Heat in amounts that will inhibit biological activity in the POTW resulting in interference but in no case heat in such quantities that the temperature at

the POTW treatment plant exceeds 40 degrees Celsius (104 degrees Fahrenheit);

f. Petroleum oil, nonbiodegradable cutting oil, or products of mineral oil origin in amounts that will cause interference or pass through;

g. Pollutants that result in the presence of toxic gases, vapors, or fumes within the POTW in a quantity that may cause acute worker health and safety problems;

h. Any trucked or hauled pollutants, except at discharge points designated by the POTW; and

i. Any pollutant that causes pass through or interference.

6.3 Categorical Standards

In addition to the general limits expressed above, more specific pretreatment limits have been promulgated for specific industrial categories under Section 307 of the Act (see ARSD, Chapter 74:52:10, a.b.r. 40 CFR Subchapter N, Parts 405 through 471, for specific information).

6.4 Legal Action

The Secretary retains the right to take legal action against the industrial user and/or the permittee, in those cases where a permit violation has occurred because of the failure of an industrial user to discharge at an acceptable level.

7.0 ADDITIONAL PERMIT CONDITIONS

7.1 Inspection and Entry

The permittee shall allow the Secretary or EPA, upon the presentation of credentials and other documents as may be required by law, to:

1. Enter the permittee's premises where a regulated facility or activity is located or conducted, or where records must be kept under the conditions of this permit;

2. Have access to and copy, at reasonable times, any records that must be kept under the conditions of this permit;

3. Inspect at reasonable times any facilities, equipment (including monitoring and control equipment), practices, or operations regulated or required under this permit; and,

4. Sample or monitor at reasonable times, for the purpose of assuring permit compliance or as otherwise authorized by the South Dakota Water Pollution Control Act, any substances or parameters at any location.

7.2 Removed Substances

1. Collected screenings, grit, solids, sludges, or other pollutants removed in the course of treatment shall be disposed of in such a manner so as to prevent any pollutant from entering any waters of the state or creating a health hazard in accordance with applicable requirements of SDCL 34A-2, -6, and -11.

2. If sludge disposal is necessary, the permittee shall submit to the Secretary a sludge disposal plan for review and approval prior to the removal and disposal of sludge. The permittee shall not dispose of sludge without the Secretary's approval.

APPENDIX A

Emergency, SSO, Upset, or Unauthorized Release Reporting Form

Emergency, SSO, Upset, or Unauthorized Release Reporting Form

This form is to be used to summarize the reporting requirements for any emergency discharge, sanitary sewer overflow, or unauthorized discharge from the permitted facility.

Facility Contact:		**Phone:**	

Description of Event *(Attach additional sheets if necessary)*

Please check the boxes below, as appropriate, to indicate the type of emergency release being reported (See* Definitions *for an explanation of each term).

☐**Emergency Discharge** ☐ **Sanitary Sewer Overflow** ☐**Unauthorized Release** ☐**Upset**	☐ **Outfall 002N** ☐ **Outfall 003N**
Date and Time the discharge began or was discovered:	
Date and Time the discharge was stopped:	

Describe the events resulting in the discharge and its cause(s):

Where did the event occur and where was the wastewater released to:

Describe the steps taken or planned to reduce, eliminate, and prevent reoccurrence:

Time and Date 24-Hour Notice of Noncompliance given to SDDENR:	
Duration of discharge (include dates and times):	
Total flow, million gallons:	
Describe any adverse effects, such as fish kills, etc.:	

ANALYTICAL RESULTS

Parameter	Sample 1	Sample 2	Sample 3	Sample 4	Sample 5	Sample 6	Sample 7
Date and time of sample							
Flow Rate, million gallons per day							
pH, standard units							
Water Temperature, °C							
Escherichia Coli, no./l00 mL							
Ammonia as N, mg/L							
Total Suspended Solids (TSS), mg/L							
Five-Day Biochemical Oxygen Demand (BOD_5), mg/L							

I certify under penalty of law that this document and all attachments were prepared under my direction or supervision in accordance with a system designed to assure that qualified personnel properly gather and evaluate the information submitted. Based on my inquiry of the person or persons who manage the system, or those persons directly responsible for gathering the information, the information submitted is, to the best of my knowledge and belief, true, accurate, and complete. I am aware that there are significant penalties for submitting false information, including the possibility of fine and imprisonment for knowing violations.

Name (print): _____ Title: _____

Signature: _____ Date: _____